SEGA®

OWNER'S MANUAL

IMPORTANT

- Before using this product, read this manual carefully to understand the contents herein stated.
- After reading this manual, be sure to keep it near the product or in a convenient place for easy reference when necessary.

BEFORE USING THE PRODUCT, BE SURE TO READ THE FOLLOWING:

To maintain safety:

To ensure the safe operation of this product, be sure to read the following before usage.
The following instructions are intended for the users, operators and the personnel in charge of the operation of the product. After carefully reading and sufficiently understanding the warning displays and cautions, handle the product appropriately. Be sure to keep this manual close to the product or in a convenient place for future reference.

Herein, explanations which require special attention are enclosed with dual lines. Depending on the potentially hazardous degrees, the terms of DANGER, WARNING, CAUTION, etc. are used. Be sure to understand the contents of the displays before reading the text.

Indicates that mishandling the product by disregarding this pictograph will cause severe injury or death.

Indicates that mishandling the product by disregarding this warning will cause a potentially hazardous situation which can result in death or serious injury.

Indicates that mishandling the product by disregarding this caution will cause a slight hazardous situation which can result in personal injury and/or material damage.

For the safe usage of the product, the following pictographs are used:

Indicates "HANDLE WITH CARE." In order to protect the human body and equipment, this display is attached to places where the Owner's Manual, Serviceman Manual and/or Service Manual should be referred to.

Indicates a "Protective Earth Terminal." Before operating the equipment, be sure to connect it to the Ground.
(The step may be omitted for products in which a power cord with earth is used.)

- **Perform work in accordance with the instructions herein stated.**
  Instructions for work are explained by paying attention to the aspect of accident prevention. Failing to perform work as per the instructions can cause accidents. In the case where only those who have technical expertise should perform the work to avoid hazardous situation, the instructions herein state that the site maintenance personnel should perform such work.
- **Be sure to turn off the power before working on the machine.**
  To prevent an electric shock, be sure to turn off the power before carrying out any work that requires direct contact with the interior of the product. If the work is to be performed in the power-on status, the Instruction Manual herein always states to that effect.
- **Be sure to ground the Earth Terminal.**
  (This is not required in the case where a power cord with earth is used.)
  This product is equipped with the Earth Terminal. When installing the product, connect the Earth Terminal to the "accurately grounded indoor earth terminal" by using an earth wire. Unless the product is grounded appropriately, the user can be subject to an electric shock. After performing repair, etc. for the control equipment, ensure that the Earth Wire is firmly connected to the control equipment.
- **Ensure that the Power Supply used is equipped with an Earth Leakage Breaker.**
  This product does not incorporate the Earth Leakage Breaker. Using a power supply which is not equipped with the Earth Leakage Breaker can cause a fire when earth leakage occurs.
- **Be sure to use fuses which meet the specified rating.**
  (Only for the machines which use fuses.)
  Using fuses exceeding the specified rating can cause a fire and an electric shock.

- **Specification changes (removal of equipment, conversion and addition) not designated by SEGA are not allowed.**
  The parts of the product include warning labels for safety, covers for personal protection, etc. It is very hazardous to operate the product by removing parts and/or modifying the circuits. Should doors, lids and protective parts be damaged or lost, refrain from operating the product, and contact where the product was purchased from or the office herein stated.
  SEGA shall not be held responsible for any accidents, compensation for damage to a third party, resulting from the specifications not designated by SEGA.
- **Ensure that the product meets the requirements of appropriate Electrical Specifications.**
  Before installing the product, check for Electrical Specifications. SEGA products have a nameplate on which Electrical Specifications are described. Ensure that the product is compatible with the power supply voltage and frequency requirements of the location. Using any Electrical Specifications different from the designated Specifications can cause a fire and an electric shock.
- **Install and operate the product in places where appropriate lighting is available, allowing warning labels to be clearly read.**
  To ensure safety for the customers, labels and printed instructions describing potentially hazardous situations are applied to places where accidents can be caused. Ensure that where the product is operated has sufficient lighting allowing the warnings to be read. If any label is peeled off, apply it again immediately. Please place an order with where the product was purchased from or the office herein stated.
- **When handling the monitor, be very careful.**
  (Applies only to the product with a monitor.)
  Some of the monitor (TV) parts are subject to high tension voltage. Even after turning off the power, some portions are still subject to high tension voltage sometimes. Monitor repair and replacement should be performed only by those technical personnel who have knowledge of electricity and technical expertise.
- **Be sure to adjust the monitor/projector properly.**
  (Applies only to the product with a monitor/projector.)
  Do not operate the product leaving on-screen flickering or blurring as it is. Using the product with the monitor/projector not properly adjusted may cause dizziness or a headache to an operator, a player, or the customers.
- **When transporting or reselling this product, be sure to attach this manual to the product.**

  In the case where commercially available monitors and printers are used in this product, only the contents relating to this product are explained herein. Some commercially available equipment has functions and reactions not stated in this manual. Read this manual together with the specific Instruction Manual of such equipment.

* *Descriptions herein contained may be subject to improvement changes without notice.*
* *The contents described herein are fully prepared with due care. However, should any question arise or errors be found, please contact SEGA.*

INSPECTIONS IMMEDIATELY AFTER TRANSPORTING THE PRODUCT TO THE LOCATION

Normally, at the time of shipment, SEGA products are in a status allowing for usage immediately after transporting to the location. Nevertheless, an irregular situation may occur during transportation. Before turning on the power, check the following points to ensure that the product has been transported in a satisfactory status.

- ❒ Are there any dented portions or defects (cuts, etc.) on the external surfaces of the cabinet?
- ❒ Are Casters and Adjusters damaged?
- ❒ Do the power supply voltage and frequency requirements meet with those of the location?
- ❒ Are all wiring connectors correctly and securely connected? Unless connected in the correct way, connector connections can not be made accurately. Do not insert connectors forcibly.
- ❒ Do power cords have cuts and dents?
- ❒ Do the fuses used meet specified ratings? Is the Circuit Protector in an energized status?
- ❒ Are all accessories available?
- ❒ Can all Doors and Lids be opened with the Accessory Keys? Can Doors and Lids be firmly closed?

TABLE OF CONTENTS

BEFORE USING THE PRODUCT, BE SURE TO READ THE FOLLOWING:

TABLE OF CONTENTS....4
INTRODUCTION....6
1. HANDLING PRECAUTIONS....8
2. PRECAUTIONS REGARDING INSTALLATION LOCATION....12
2-1 LIMITATIONS OF USAGE....12
2-2 OPERATION AREA....13
3. PRECAUTIONS REGARDING PRODUCT OPERATION....14
3-1 BEFORE OPERATION....14
3-2 DURING OPERATION (PAYING ATTENTION TO CUSTOMERS)....16
4. PART DESCRIPTIONS....18
5. ACCESSORIES....19
6. ASSSEMBLY AND INSTALLATION....20
6-1 ASSSEMBLING BILLBOARD BOX AND POP....21
6-2 FIXATION TO INSTALLATION SITE....22
6-3 TURNING ON THE POWER (SOFTWARE INSTALLATION)....24
7. PRECAUTIONS WHEN MOVING THE MACHINE....28
8. GAME DESCRIPTION....29
8-1 GAME OUTLINE....29
8-2 MODE OUTLINE....31
8-3 HOW TO PLAY....32
8-4 HINTS FOR PLAYING THE GAME....36
9. EXPLANATION OF TEST AND DATA DISPLAY....37
9-1 SWITCH UNIT....38
9-2 SYSTEM TEST MODE....39
9-3 GAME TEST MODE....41
10. ERROR DISPLAY....51
11. CONTROL PANEL (HANDLE MECHA)....57
11-1 REMOVING THE CONTROL PANEL....58
11-2 ADJUSTING/REPLACING THE VOLUME....59
11-3 GREASING....61
12. ACCELERATOR & BRAKE....62
12-1 VOLUME ADJUSTMENT AND REPLACEMENT....63
12-2 GREASING....64
13. MONITOR (32” LCD)....65
13-1 SAFETY PRECAUTIONS WHEN HANDLING THE MONITOR....65
13-2 CLEANING THE SCREEN SURFACE....66
15. PERIODIC INSPECTION....69
15-1 TROUBLESHOOTING (WHEN NO ERROR MESSAGE IS SHOWN)....69
15-2 ERROR MESSAGES....73

16. GAME BOARD 75
16-1 CONTROL BOARDS - LOCATION 76
16-2. CONTROL BOARDS – IDENTIFICATION.....78
17. COMMUNICATION PLAY 79
17-1 INSTALLATION PRECAUTIONS.....79
17-2 CONNECTING THE COMMUNICATION CABLE.....81
17-3 NETWORK PLAY SETTINGS.....82
17-4 NETWORK PLAY PRECAUTIONS.....83
18. DESIGN-RELATED PARTS 84
19. PARTS LIST..... 85
20. WIRE COLOR CODE TABLE 92
21. WIRING DIAGRAM 93

INTRODUCTION

This manual is intended to provide detailed descriptions together with all the necessary information covering the general operation of electronic assemblies, electro-mechanicals, servicing control, spare parts, etc. for the product, “HUMMER EXTREME EDITION STD”.

This manual is intended for the owners, personnel and managers in charge of operation of the product.
Operate the product after carefully reading and sufficiently understanding the instructions.

In the unlikely event that the product does not function correctly, DO NOT allow anyone other than a technician to touch the internal system. Turn off the power to the machine, making sure to unplug the electrical cord from the outlet, and contact the office listed below or the point of purchase for this product.

Use of this product is unlikely to cause physical injuries or damage to property. However, points that require special attention are indicated by bold text, the word “IMPORTANT” .

STOP IMPORTANT

Indicates important information that, if ignored, may result in the mishandling of the product and cause faulty operation or damage to the product.

Sega Amusements U.S.A., Inc.
800 Arthur Avenue, Elk Grove Village, IL 60007-5215, U.S.A.

TEL: 1-847-364-9787
TOLL FREE: 1-888-877-2669
FAX: 1-847-427-1065

SEGA AMUSEMENTS EUROPE, LTD.
42, Barwell Business Park, Leatherhead Road, Chessington, Surrey, KT9 2NY United Kingdom

Telephone: +44 (0) 208 391 8090 Facsimile: +44 (0) 208 391 8099
e-mail: mailbox@sega.co.uk http://www.sega-amusements.co.uk

SEGA CORPORATION
5F TRC Haneda Building, 2-13-1 Higashikojiya, Ohta-ku, Tokyo 144-0033 Japan

Telephone: +81-(0)3-6863-8401 Facsimile: +81-(0)3-6863-8407

SPECIFICATIONS

Installation space:	1,007 mm [Width] x 1,575 mm [Depth]
Height:	2,100 mm
Weight:	240 kg
Power, maximum current:	554W, 4.62 A (AC 120 V, 60 Hz Area) 559 W, 2.88 A (AC 230 V, 50 Hz Area)
Monitor:	32 Type LCD Monitor

NOTE: The contents herein described are subject to change without notice.

Definition of 'Site Maintenance Personnel or Other Qualified Individuals'

⚠ WARNING

Procedures not described in this manual or marked as 'to be carried out by site maintenance personnel or other qualified professionals' should not be carried out by personnel without the necessary skill or technology. Work carried out by unqualified persons may cause serious accidents, including electrocution.

Parts replacement, maintenance inspections and troubleshooting should be carried out by site maintenance personnel or other qualified professionals. This manual includes directions for potentially dangerous procedures which should only be carried out by professionals with the appropriate specialized knowledge.

The site maintenance personnel or other qualified professionals mentioned in this manual are defined as follows:

Site maintenance personnel:
Individuals with experience in maintaining amusement equipment, vending machines, etc., working under the supervision of the owner/operator of this product to maintain machines within amusement facilities or similar premises by carrying out everyday procedures such as assembly, maintenance inspections, and replacement of units/expendable parts.

Activities to be carried out by site maintenance personnel:
Amusement equipment/vending machine assembly, maintenance inspection and replacement of units/expendable parts.

Other qualified professionals:
Persons employed by amusement equipment manufacturers, or involved in design, production, testing or maintenance of amusement equipment. The individual should have either graduated from technical school or hold similar qualifications in electrical/electronics/mechanical engineering.

Activities to be carried out by other qualified professionals:
Amusement equipment/vending machine assembly, repair/adjustment of electrical/electronic/mechanical parts.

1. HANDLING PRECAUTIONS

When installing or inspecting the machine, be very careful of the following points and pay attention to ensure that the player can enjoy the game safely.
Non-compliance with the following points or inappropriate handling running counter to the cautionary matters herein stated can cause personal injury or damage to the machine.

⚠ WARNING

● Before performing work, be sure to turn the power off. Performing the work without turning the power off can cause an electric shock or short circuit. In the case work should be performed in the status of power on, this manual always states to that effect.

● To avoid an electric shock or short circuit, do not plug in or unplug quickly.

● To avoid an electric shock, do not plug in or unplug with a wet hand.

● Do not expose power cords or earth wires on the surface, (floor, passage, etc.). If exposed, the power cords and earth wires are susceptible to damage. Damaged cords and wires can cause an electric shock or short circuit.

● To avoid causing a fire or an electric shock, do not put things on or damage the power cords.

● When or after installing the product, do not unnecessarily pull the power cord. If damaged, the power cord can cause a fire or an electric shock.

● In case the power cord is damaged, ask for a replacement through where the product was purchased from or the office herein stated. Using the cord as is damaged can cause fire, an electric shock or leakage.

● Be sure to perform grounding appropriately. Inappropriate grounding can cause an electric shock.

● Be sure to use fuses meeting the specified rating. Using fuses other than the specified rating can cause a fire or an electric shock.

● Be sure that connections such as IC BD are made properly. Insufficient insertion can cause an electric shock.

● Specification changes, removal of equipment, conversion and/or addition, not designated by SEGA are not permitted.

- Failure to observe this may cause a fire or an electric shock. Non-compliance with this instruction can have a bad influence upon physical conditions of the players or the onlookers, or result in injury during play.

- SEGA shall not be held responsible for damage, compensation for damage to a third party, caused by specification changes not designated by SEGA.

● Do not perform any work or change parts not listed in this manual. Doing so may lead to an accident.

If you need to perform any work not listed in this manual, request work from the office indicated in this manual or the point of purchase, or inquires for details.

● Be sure to perform periodic maintenance inspections herein stated.

(STOP) IMPORTANT

- **For the IC board circuit inspections, only the logic tester is allowed. The use of a multiple-purpose tester is not permitted, so be careful in this regard.**
- **When cleaning the CRT surfaces, use a soft and dry cloth. Do not apply chemicals such as thinner, benzene, etc.**
- **Static electricity from your body may damage some electronics devices on the IC board. Before handling the IC board, touch a grounded metallic surface so that the static electricity can be discharged.**
- **Some parts are not designed and manufactured specifically for this game machine. The manufacturers may discontinue, or change the specifications of such general-purpose parts. If this is the case, SEGA cannot repair or replace a failed game machine whether or not a warranty period has expired.**

CONCERNING WARNING DISPLAYS

This product has warning displays on stickers, labels and/or printed instructions adhered/attached to or incorporated in the places where a potentially hazardous situation could arise. The warning displays are intended for accident prevention for customers and for avoiding hazardous situations relating to maintenance and servicing work. Some portions of the cabinet contain high voltage and may cause accidents if touched.
When performing maintenance, be very careful of the warning displays. It is especially important that any complex repair and replacement work not mentioned herein should be performed by those technical personnel who have knowledge of electricity and technical expertise. In order to prevent accidents, caution any customer ignoring the warnings to cease and desist immediately.

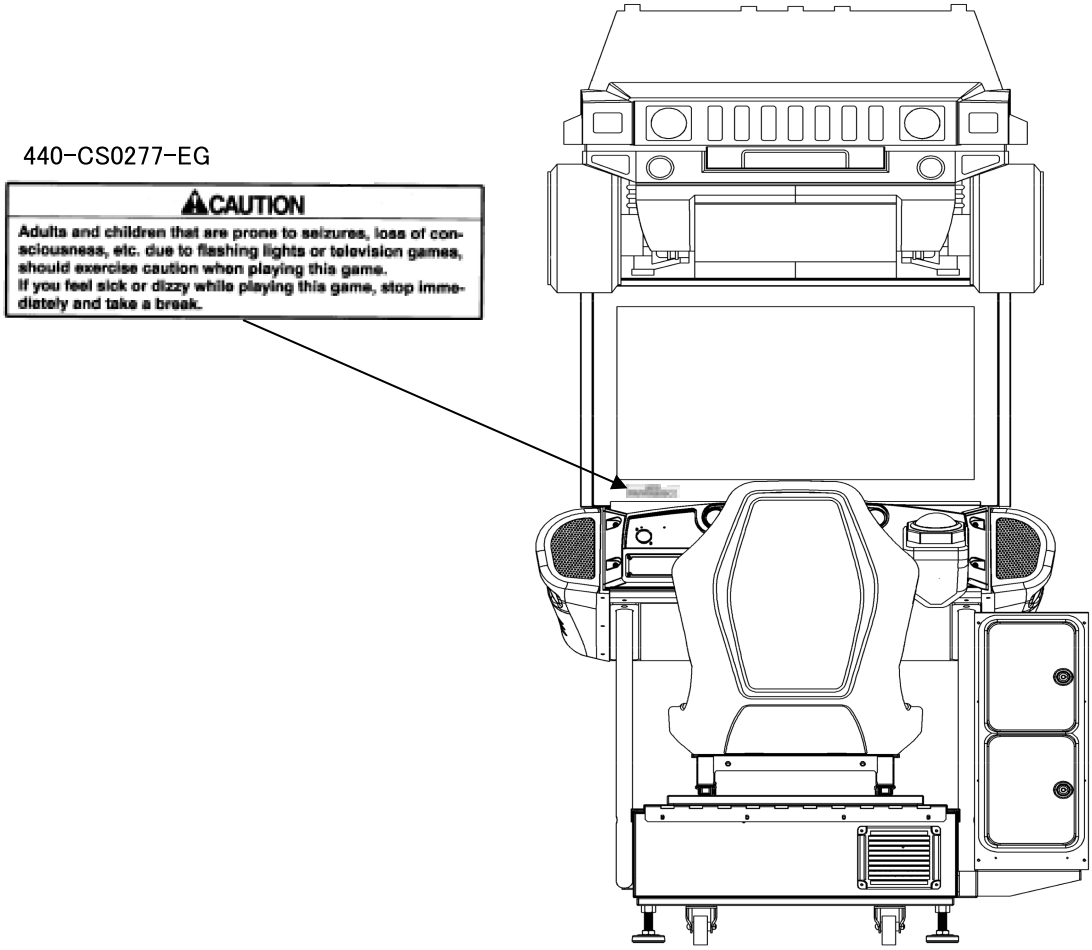

440-WS0286-EG

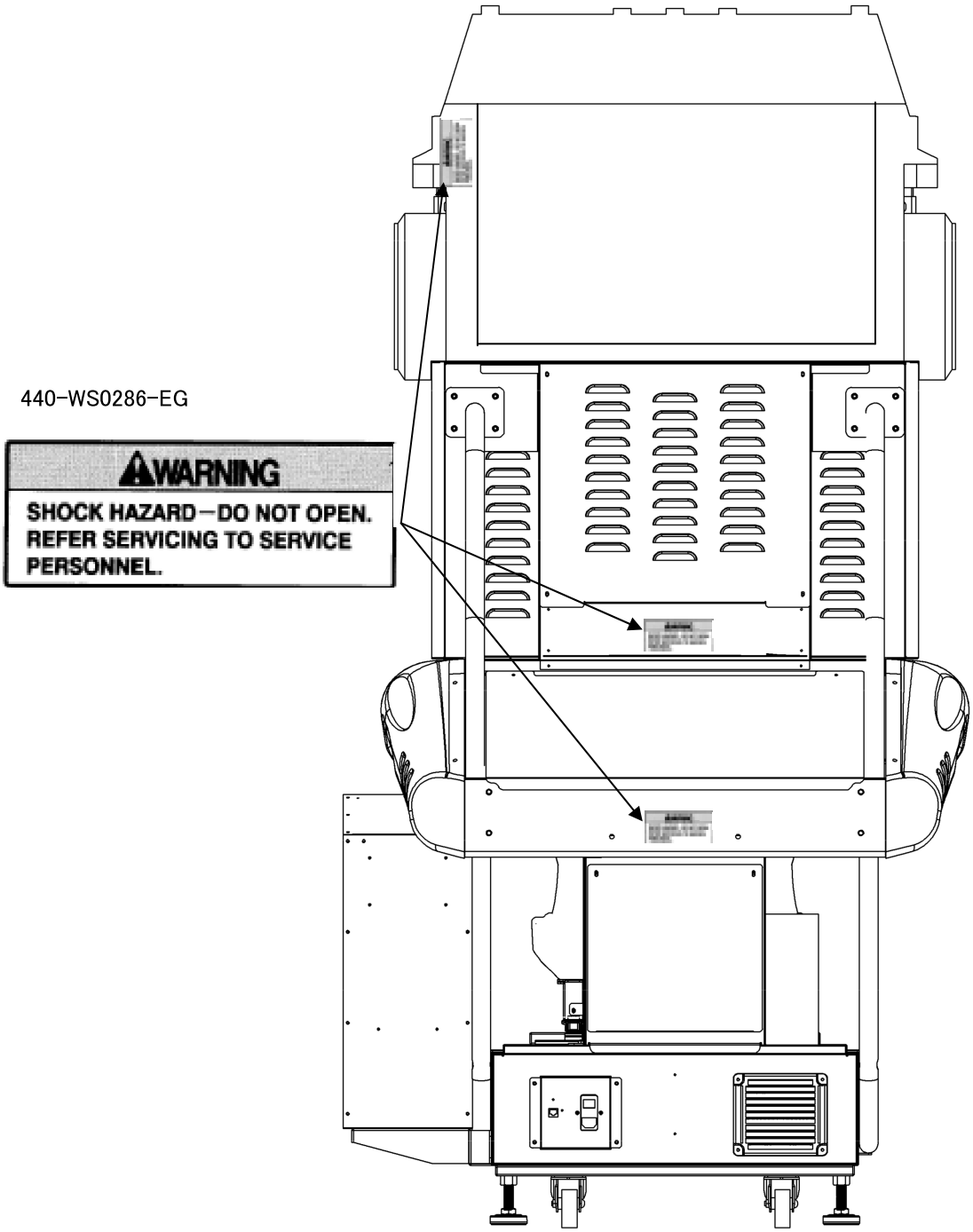

2. PRECAUTIONS REGARDING INSTALLATION LOCATION

⚠ WARNING

This product is an indoor game machine. Do not install it outside. Even indoors, avoid installing in places mentioned below so as not to cause a fire, electric shock, injury and/or malfunction.

- Places subject to rain or water leakage, or places subject to high humidity in the proximity of an indoor swimming pool and/or shower, etc.

- Places subject to direct sunlight, or places subject to high temperatures in the proximity of heating units, etc.

- Places filled with inflammable gas or vicinity of highly inflammable/volatile chemicals or hazardous matter.

- Dusty places.

- Sloped surfaces.

- Places subject to any type of violent impact.

- Vicinity of anti-disaster facilities such as fire exits and fire extinguishers.

- Areas where the temperature exceeds the applicable temperature (ambient temperature) range of 5 to 30 degrees centigrade.

2-1 LIMITATIONS OF USAGE

⚠ WARNING

● Be sure to check the Electrical Specifications. Ensure that this product is compatible with the location's power supply, voltage, and frequency requirements. A plate describing Electrical Specifications is attached to the product. Non-compliance with the Electrical Specifications can cause a fire and electric shock.

● This product requires a breaker and earth mechanism as part of the location facilities. Using the product without these can cause a fire and electric shock.

● Ensure that the indoor wiring for the power supply is rated at 15 A or higher (AC single phase 100 V ~ 120 V area), and 7 A or higher (AC 220 V ~ 240 V area). Non-compliance with the Electrical Specifications can cause a fire and electric shock.

● Be sure to use an independent power supply equipped with an earth leakage breaker. Using a power supply without an earth leakage breaker can cause an outbreak of fire if a power surge occurs.

● Putting many loads on one electrical outlet can cause generation of heat and a fire resulting from overload.

● When using an extension cord, ensure that the cord is rated at 15 A or higher (AC 100 V ~ 120 V area) and 7 A or higher (AC 220 V ~ 240 V area). Using a cord rated lower than the specified rating can cause a fire and electric shock.

2-2 OPERATION AREA

⚠ WARNING

- **For safe operation, use and operate this product in an area measuring at least 1.7m in width and 2.2m in depth. The area prescribed in this manual is absolutely necessary, for if one should fall over and hit their head against something, there could be a serious accident.**
- **Be sure to provide sufficient space specified in this manual. Do not allow objects to block the ventilation ports. It can cause generation of heat and a fire.**
- **SEGA shall not be held responsible for damage or compensation for damage to a third party, resulting from the failure to observe this instruction.**
- **If the machine does not fit through the entryway to the installation location, do not disassemble it without first consulting the instructions. The machine should only be disassembled in accordance with the instructions listed in this manual; do not attempt to disassemble it in any other way. This may cause electric shock or short circuits.**

(STOP) IMPORTANT

To install this product, the entrance must be at least 1.2m in width and 1.7m in height.

3. PRECAUTIONS REGARDING PRODUCT OPERATION

To avoid injury and trouble, be sure to pay attention to the behavior of visitors and players.

3-1 BEFORE OPERATION

⚠ WARNING

In order to avoid accidents, check the following before starting the operation:

● To ensure maximum safety for the players and the customers, ensure that where the product is operated has sufficient lighting to allow any warnings to be read. Operation under insufficient lighting can cause bodily contact with each other, hitting accident, and/or trouble between customers.

● Be sure to perform appropriate adjustment of the monitor (projector). For operation of this machine, do not leave monitor's flickering or deviation as is. Failure to observe this can have a bad influence upon the players' or the customers' physical conditions.

● It is suggested to ensure a space allowing the players who feel sick while playing the game to take a rest.

● Check if all of the adjusters are in contact with the surface. If they are not, the Cabinet can move and cause an accident.

3 FIG. 01

1) Ensure that all of the adjusters are in contact with the floor.

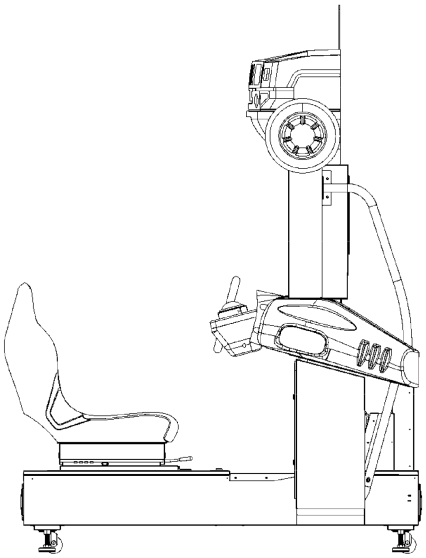

⚠ WARNING

- **Do not put any heavy item on this product. Placing any heavy item on the product can cause a falling down accident or parts damage.**
- **Do not climb on the product. Climbing on the product can cause falling down accidents. To check the top portion of the product, use a step ladder.**
- **To avoid electric shock, check to see if door & cover parts are damaged or omitted.**
- **To avoid electric shock, short circuit and/or parts damage, do not put the following items on or in the periphery of the product. Flower vases, flowerpots, cups, water tanks, cosmetics, and receptacles/containers/vessels containing chemicals and water.**

⚠ CAUTION

- **During daily cleaning, be sure to check the surface of the steering wheel, gear shifter, and other parts that the player touches with his hands for damage, cracks, or loose screws. If a player uses the machine while it is damaged, cracked, or has a loose screw, the player may become injured.**
- **During daily cleaning, be sure to check the seat for any abnormality, wetness, etc. Failure to do this may result in deliberate tampering or negligence being left undetected.**
- **To avoid injury, be sure to provide sufficient space by considering the potentially crowded situation at the installation location. Insufficient installation space can cause making bodily contact with each other, hitting accidents, and/or trouble between customers.**

3-2 DURING OPERATION (PAYING ATTENTION TO CUSTOMERS)

⚠ WARNING

● For safety reasons, do not allow any of the following people to play the game.

- Those who need assistance such as the use of an apparatus when walking.

- Those who have high blood pressure or a heart problem.

- Those who have experienced muscle convulsion or loss of consciousness when playing video games, etc.

- Those who have neck or spinal cord problems.

- Those who are intoxicated or under the influence of drugs.

- Pregnant women.

- Persons susceptible to motion sickness.

- Persons who disregard the product's warning displays.

● Even players who have never been adversely affected by light stimulus might experience dizziness or headache depending on their physical condition when playing the game. Small children are especially likely to experience these symptoms. Caution guardians of small children to keep watch on their children during play.

● Instruct those who feel sick during play to have a medical examination.

● To avoid injury from falls and electric shocks due to spilled drinks, instruct the player not to place heavy items or drinks on the product.

● To avoid electric shocks and short circuits, do not allow customers to put hands and fingers or extraneous matter in the openings of the product or small openings in or around the doors.

● To avoid falls and resulting injury, immediately stop the customer from leaning against or climbing on the product, etc.

● To avoid electric shock and short circuit, do not allow customers to unplug the power plug without a justifiable reason.

● This game is for one player only. If two or more customers attempt to sit in the seat and play at the same time, it may results in players falling over, falling off, or catching body parts in the ride.

● Persons other than the player should not be allowed to touch the controls during play. They may brush against or collide with the controls or the player, possibly resulting in accidents.

3 FIG. 02

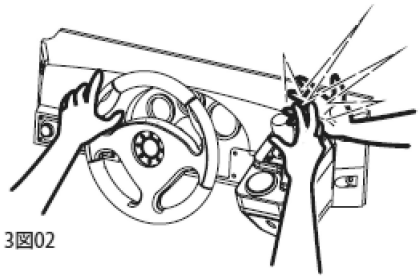

3図02

⚠ WARNING

● Customers should be warned not to place children on their laps while they play the game. Doing so may cause the child to become trapped between the player and the control panel and/or cause the machine to tip over.

⚠ CAUTION

Immediately stop such violent acts as hitting and kicking the product. Such violent acts can cause parts damage or falling down, resulting in injury due to fragments and falling down.

4. PART DESCRIPTIONS

1) POP
2) BILLBOARD BOX
3) 32 TYPE LCD
4) CONTROL PANEL
5) BOOST BUTTON
6) ACCELERATOR & BRAKE
7) MAIN BASE

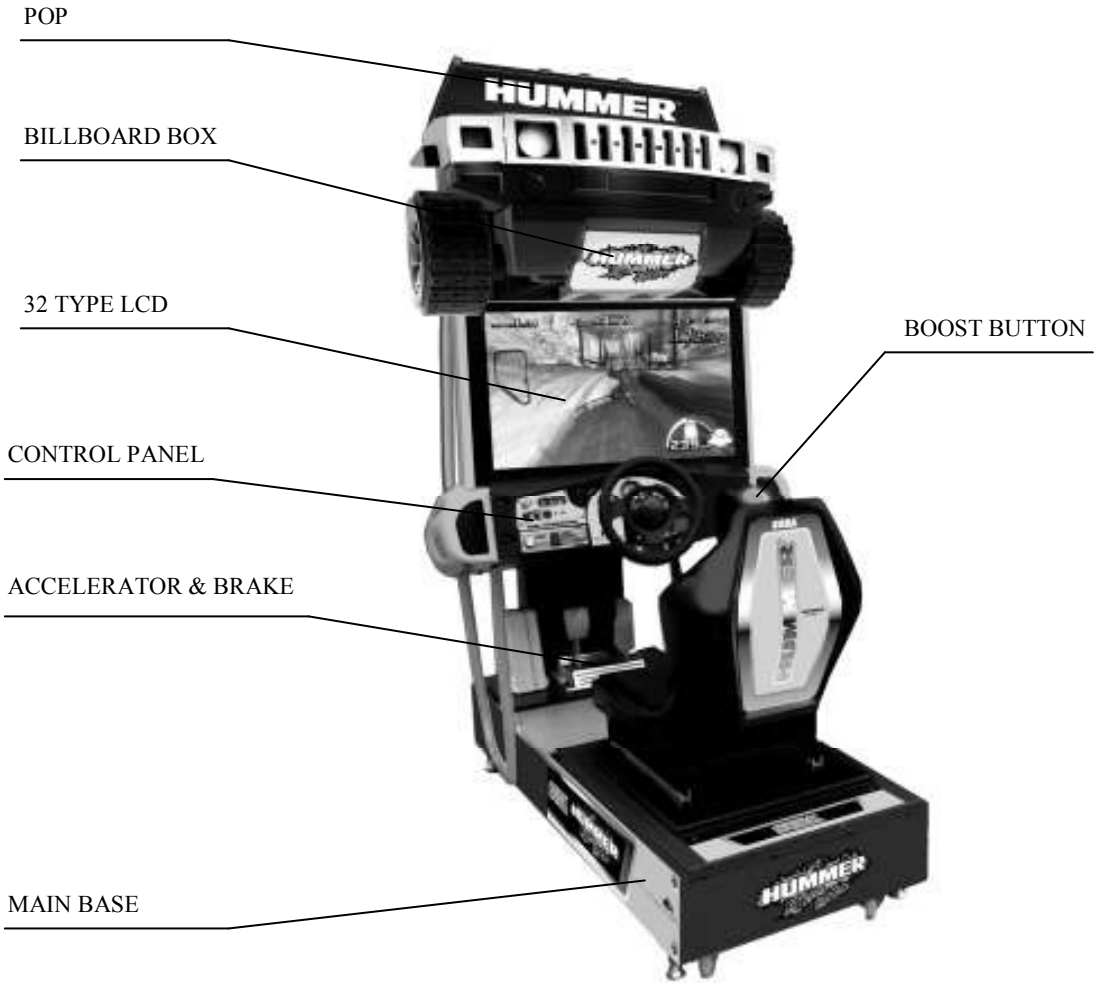

5. ACCESSORIES

Confirm that the accessories listed in the table below are present when setting up the product. Accessories marked "Spare" in the note column are consumable items but included as spares.

5 TABLE 01

OWNER'S MANUAL	COMMUNICATION CABLE 5m	AC CABLE (Power Code)
420-7108-01 (1) This manual STICKER PLAYER NUMBER HMM-0022		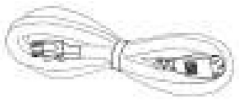

(P.14)
5 TABLE 02 SOFTWARE KIT XKT-1675-D

DVD SOFTWARE KIT (1)
1) DVD-ROM DISC (1)
2) KEY CHIP (1)
3) DISC CASE (1)
4) CUSION SPONGE / 601-11137 (1) / Disc Protector
5) STICKER / 443-40019D

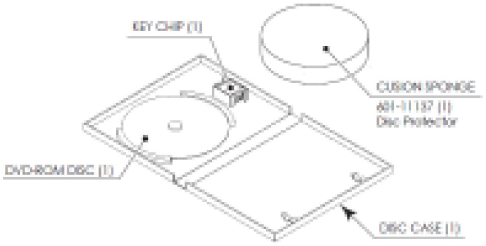

When you order the DVD-ROM disc only, specify the part number 610-0726-0044 (DVD SOFT RTV).

NOTE;
The game software has been pre-installed in the main PCB and the key chip has been pre-set to the main PCB.
Please use the DVD software, only when necessary for some reason such as replacing the main PCB.
However to install the software, the DVD DRIVE and USB(mini type) cable needs to be prepared separately.
Those are not included in the unit and available separately at SEGA.

6. ASSEMBLY AND INSTALLATION

⚠ WARNING

● Perform assembly work by following the procedure herein stated. Failure to comply with the instructions can cause electric shock.

● Perform assembling as per this manual. Since this is a complex machine, incorrect assembling can cause an electric shock, machine damage and/or improper functioning as per specified performance.

● When assembling, more than one person is required. Depending on the assembly work, there are some cases in which working by one person alone can cause personal injury or parts damage.

● Ensure that connectors are properly connected. Improper connections can cause electric shock.

● This work should be carried out by the site maintenance personnel or other qualified professionals. Work performed by non-technical personnel can cause a severe accident such as electric shock. Failing to comply with this instruction can cause a severe accident such as electric shock to the player during operation. If no one with proper technological expertise is available, request service from the office indicated in this document or the point of purchase so as to ensure safety.

● Provide sufficient space so that assembling can be performed. Performing work in places with narrow space or low ceiling may cause an accident and assembly work to be difficult.

●To perform work safely and avoid serious accident such as the cabinet falling down, do not perform work in places where step-like grade differences, a ditch, or slope exist.

● Be careful not to damage the wires. Damaged wires may cause electric shock or short circuit or present a risk of fire.

● Do not leave power cords, ground wires, or network cables exposed in areas of heavy foot traffic. Doing so may cause them to become damaged, possibly resulting in electric shock and/or short circuits. When laying wiring across the floor, always use safety covers to protect the wires. (Wiring diameter: power cable - approx. Ø 8; network cable - approx. Ø 5)

● The power cord for this product has a ground terminal. Make sure to use this ground terminal when plugging it in to an indoor outlet. Failure to properly ground the product could lead to electrocution. It can also lead to malfunction.

⚠ CAUTION

● When opening/closing, attaching/removing doors or lids, be careful that your hand or finger does not get caught in anything.

● To perform the operation safely and accurately you must use a safe, steady footstool or stepladder. Working without this may lead to a fall and possible injury.

● Wear appropriate work clothing so that work can be performed safely. Use gloves and safety shoes to prevent accidents or injuries.

● When installing a wire protection cover over a floor, use a material shaped so that no one passing by will stumble over it. Using a material that could be stumbled over might lead to an accidental fall.

● Handle plastic parts with care. Excessive weight or pressure may cause them to break and the broken pieces may cause injury.

When carrying out the assembling and installation, follow the following 6-item sequence.

6-1 Assembling billboard box and pop
6-2 Fixation to installation site
6-3 Turning on the power (Software installation)

Tools necessary for work

- Phillips screwdriver

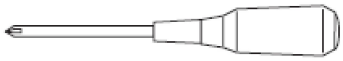

-Socket wrenches for hexagon bolts and nuts

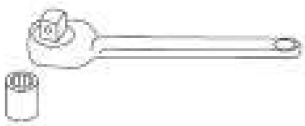

- Spanner with measuring distance of 24 mm to opposite side (for M16 hexagon bolts)

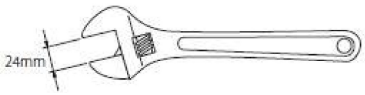

- Step

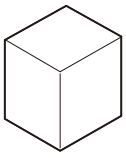

6-1 ASSEMBLING BILLBOARD BOX AND POP

1. Put the Billboard Box on top of monitor.

2. Fasten it with 7 hexagon nuts and 2 washers.

3. Fit the fluorescent unit into 2 clamps and connect necessary connectors..

4. Pre-fix billboard back lid and POP with double-face tape.

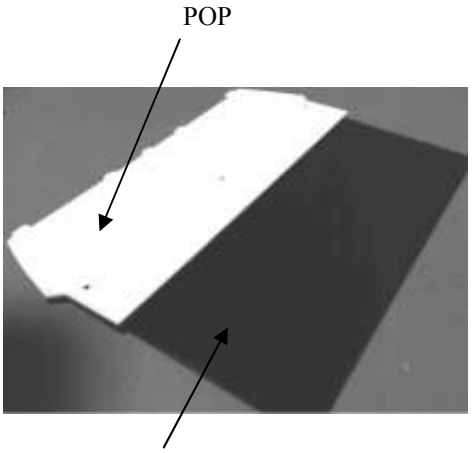

5. Fasten billboard back lid and POP pre-fixed on above step No.4 to back of billboard box with 6 screws.

6-2 FIXATION TO INSTALLATION SITE

⚠ WARNING

Make sure that all the adjusters contact the floor. Otherwise the cabinet could move, causing an accident.

This product has 4 casters and 4 adjusters.

Up to 4 machines can be connected for multi-player games. If several machines are to be installed, refer to Chapter 19.

1. Move the product to the installation site. See Chapter 19 for an example of installation. Make sure to leave enough passage space for the player to get into the seat. Also leave some space on the back lid side for performing maintenance work later.

2. Have all the adjusters make contact with the floor. Adjust the adjuster's height by using a wrench so that the machine position is kept level.

3. After making adjustment, fasten the adjuster nut upward and secure the height of adjuster.

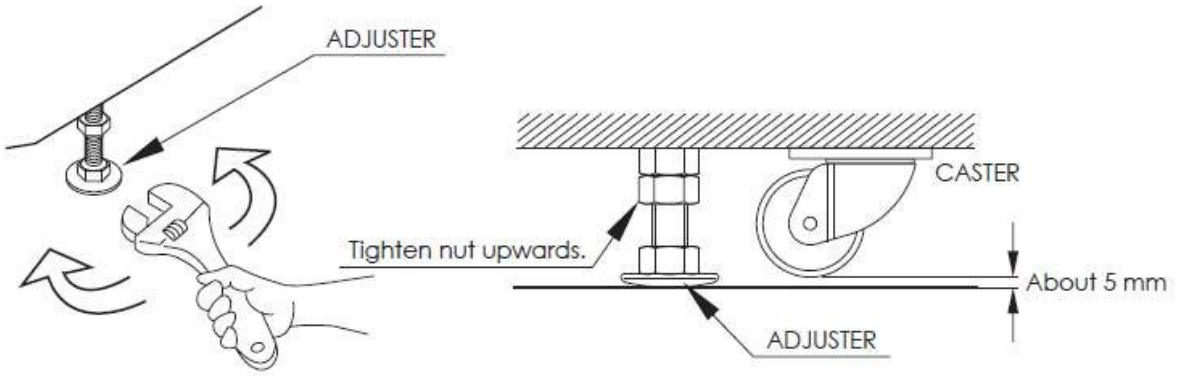

6-3 TURNING ON THE POWER (SOFTWARE INSTALLATION)

The software installation is not necessary for this game, as it is pre-installed into the main PCB. Please refer to the following section, only when necessary.

⚠ WARNING

● Be careful not to damage the DVD wire by getting it caught between objects, etc. Doing so may cause a short circuit or fire.

● The following explanation assumes that the product has been assembled properly as explained above. If there is an error or if the product operates in a manner other than as indicated below, cut off the power supply immediately. Failure to do so may result in a fire or electrical shock.

● If you look directly at the laser beam in the DVD DRIVE, you could suffer vision impairment. Do not look inside the DVD DRIVE.

(STOP) IMPORTANT

● Do not use or store the DVD DRIVE or DVD wire in any of the following locations, as this may result in serious damage.

[Do not use or store in these locations]

- Anywhere which may vibrate or shock the equipment

- In direct sunlight

- In damp or dusty places

- In places with a sharp change in temperature

- Close to anything that gives off heat (a heater, etc.)

- Close to anything with a strong magnetic field (magnets, monitor, speakers, radio, etc.)

- Anywhere that is likely to get wet (kitchen, etc.)

- Anywhere with a slope or incline

- Anywhere with corrosive gas in the air (chlorine, hydrogen sulfide, ammonia, sulfur dioxide, etc.)

- Anywhere with strong static electricity

[Do not use in these locations]

- Close to anything that is highly retentive of heat (carpet, sponge, cardboard, etc.)

- Anywhere that blocks the DVD DRIVE air vent.

● The DVD DRIVE is a delicate piece of equipment. Avoid the following.

- Dropping or shaking it violently.

- Getting water or other liquids on it, or placing small items on top of it.

- Placing large or heavy items on top of it.

- Drinking or smoking close to the DVD DRIVE.

(STOP) IMPORTANT

● Do not turn off the power to the DVD DRIVE when its access lamp is on or flashing, as this could cause damage to the device.

● Do not allow any foreign materials, such as liquids, metals or smoke inside the DVD DRIVE.

● Use a soft, dry cloth to wipe off any dirt or marks on the DVD DRIVE.

- If you need to use a cleaning agent, always use a "neutral" agent diluted in water.

- Never use products or cleaning agents containing benzene, alcohol, thinners, etc.

● Do not touch the lens inside the DVD DRIVE. Doing so may prevent it from reading accurately.

● The chip components on IC boards can be damaged by electrostatic discharge from the human body. Before handling an IC board, always neutralize any static charge in the body by touching a grounded metal surface.

● Some parts are not designed and manufactured specifically for the kit. The manufacturers may discontinue, or change the specifications of such general purpose parts. If this is the case, SEGA cannot repair or replace a failed kit whether or not a warranty period has expired.

● The software is not installed on the game board (LINDBERGH) when the power supply is engaged, so the "Error 22" message is not a malfunction. However, if there is another error display, or if there is no video output at all, there might have been an error in product assembly, wiring connections might be faulty, or the LINDBERGH might not be functioning properly.

● After the power supply is engaged, wait for "Error 22" message to be displayed. If the product is indiscriminately operated in any way beforehand, there could be unexpected problems or malfunctions, as well as damage to parts.

● Once "Error 22" is displayed, set the DVD-ROM in the DVD DRIVE and re-engage the power supply. Installation takes place.

(STOP) IMPORTANT

● After the power supply is engaged, the DVD DRIVE tray will not come out for about 30 seconds even if you press the switch. This is due to DVD DRIVE initialization.

● The DVD DRIVE tray can come out or return only while the power supply is engaged. The tray cannot be opened or closed while the power is off.

● Even after the software has been installed, store the DVD software kit, DVD DRIVE and DVD wire in a secure location.

● If for any reason installation cannot be completed, an error is displayed. Refer to the LINDBERGH service manual and take corrective action.

Take out the DVD software kit provided.

1. Turn on the MAIN POWER switch on the AC unit.

2. The LINDBERGH startup image appears on the screen. However, it does take several minutes for the projector image to become visible. Wait for at least one minute. An error will occur. Check to see if it is “Error 22.” If it is “Error 22,” proceed to the next operation. If it is not “Error 22,” take corrective measures as indicated in the LINDBERGH service manual.

3. Remove 1 urea (resin-head) screw, and then remove DVD DRIVE case lid.

4. Press the DVD DRIVE switch. The DVD DRIVE tray comes out. Set the DVD from the DVD software kit into the tray. Always have the DVD label side facing upward.

5. Press the DVD DRIVE switch and the tray returns to its original position.

6. Reset power. Turn the MAIN POWER switch to OFF, wait for at least 10 minutes, and then turn the switch to ON. Wait until the projector lamp cools.

7. Software installs automatically from the DVD to the LINDBERGH. In some cases, it may take as long as 30 minutes for the software to install to the LINDBERGH.

8. After the software installation, the game image appears automatically.

9. Press the DVD DRIVE switch to have the tray come out, and then remove the DVD.

10. Press the DVD DRIVE switch to have the tray return. When the power is cut off the tray will not move.

11. Set the MAIN POWER switch to OFF.

12. Remove 2 DVD wires from the DVD DRIVE.

13. Refer to steps 1-13 in “6-3 ATTACHING DVD DRIVE AND KEY CHIP” and follow the steps in reverse order to detach the DVD wire (2 m) from the cabinet.

14. Attach DVD DRIVE case lid and fasten it with 1 urea (resin-head) screw.
Store DVD DRIVE and DVD software kit at a location where there is no dust or cigarette smoke.

15. Turn on the MAIN POWER switch on the AC unit. When the game image appears, installation is complete.

7. PRECAUTIONS WHEN MOVING THE MACHINE

⚠ WARNING

- **Always disconnect the power cable before moving the product. If it is moved with the power cable connected, the cable could be damaged, causing fire or electric shock.**
- **Do not push the cabinet from the left/right when attempting to move the unit. Pushing from the sides may cause the unit to tip and result in injury and damage to parts.**

⚠ CAUTION

Do not push on any parts made of glass (e. g. CRT screen) or plastic, as these parts may break and result in bodily injury.

1) Do not push the cabinet from the left/right direction.

2) Do not push on the slanted portion.

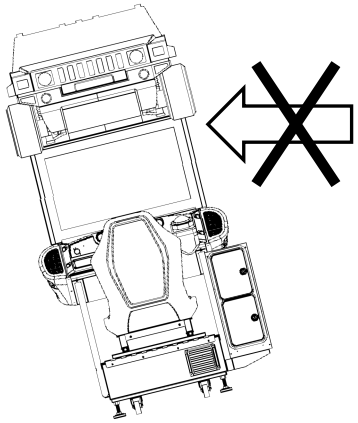

8. GAME DESCRIPTION

8-1 GAME OUTLINE

- This is an off-road racing game featuring the GM Hummer.
The sturdy Hummer plunges along rugged courses with jumps and banks, scattering obstacles in its path.

- By destroying various obstacles on the course, the player builds up Boost, and when the Boost Gauge reaches the maximum level, Boost can be used. The goal is to use Boost effectively to reach the finish and achieve victory.

- There are 4 courses in total (beginner/intermediate/advanced/super advanced). A total of 4 course types await the players: a wilderness of windswept bare rock; an unexplored jungle where nature stands in your way; an intensely cold and rugged snowy mountain range; and an abandoned factory with complicated diverging paths.

8-1-1 BASIC CONTROLS

● STEERING
Changes the direction the car is going. Handling varies depending on the model.

● GAS (ACCELERATOR)
The car accelerates. Also control the car during a jump.

● BRAKE
The car decelerates. Use it to drift on curves.

● BOOST button
When the Boost Gauge at the bottom right of the screen reaches its maximum level, you can use Boost. Press to make the car accelerate rapidly for a given length time.

● VIEW CHANGE button
Switch the view between third person view and bonnet view. Also use to skip counts.

● START button
Choose the selected item.

8-1-1 FIG. 01

1) START BUTTON (START)
2) VIEW CHANGE BUTTON (VIEW CHANGE)
3) BOOST BUTTON (BOOST)
4) STEERING
5) BRAKE
6) GAS

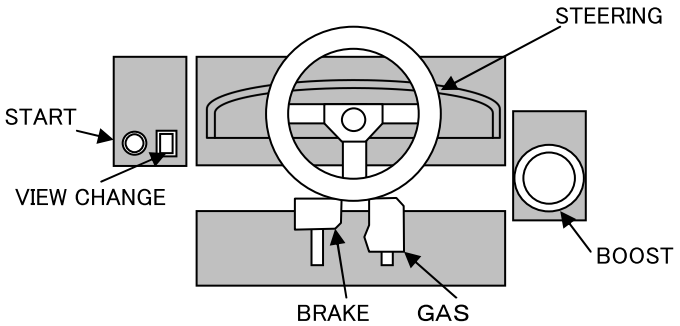

8-1-2 CAR SELECTION

6 types of car are available. Performance varies depending on the model.

8-1-2 TABLE 01

Car Model	Type	
H1	Rally Tuning	Sports Tuning
H2	Rally Tuning	Sound Tuning
H3	Rally Tuning	Street Tuning

8-1-3 RACE COURSE

There are 4 courses in total. All courses are circuit tracks.

8-1-3 TABLE 01

Course Name	Difficulty	Laps
BLUSTER CANYON	EASY	3
ISOLATED JUNGLE	NORMAL	3
CARIBOU VALLEY	HARD	2
INDUSTRIAL HILL	SUPER HARD	2

8-2 MODE OUTLINE

8-2-1 SINGLE PLAYER MODE

● RACE MODE
In this mode, a total of 20 cars, made up of the player and rivals (19 CPU cars), compete.

● TIME ATTACK MODE
Racing alone, the player competes against ghost data to try to achieve the fastest time.

NOTE: In both "Race Mode" and "Time Attack Mode," the game is over when the time reaches zero. Time is added when a checkpoint is passed or a lap is completed.

8-2-2 VERSUS MODE (VS MODE)

This mode allows players to compete against other machines in the same location. Versus games involving a maximum of 4 cabinets are possible.
When one player passes a checkpoint, time is added for all players.
When a player crosses the finish line, the remaining time for all other players will change to 10 seconds, and if they cannot finish within 10 seconds, time will be up and the race will end.
When this happens, a player's finishing place will be determined by their position when time runs out.

8-3 HOW TO PLAY

1. Insert coins. When the number of credits required for the game to start is reached, press the Start button, and the game will start.

2. The game will wait for opponents from possible opponent machines not being played. Versus Mode will begin if sufficient coins are inserted into another machine and press the Start button while you are waiting for opponents. The wait for opponents will end when the countdown reaches zero or when the number of players reaches the set amount, and the game will begin with the current number of waiting players. (Single Player Mode will begin if there is one machine.)
NOTES:
- You will not be taken to the waiting for opponents screen if there is only a single machine or the machine has not been set up for Versus Mode.
- Press the VIEW button while stepping on the brake to cancel the wait for opponents.

3. Select the game mode. Use the steering wheel to select the mode and confirm your selection with the gas pedal. (Only if you selected in Single Player Mode)

8-3 FIG. 01

4. Select the car you will use. Use the steering wheel to select the car and confirm your selection with the gas pedal.

8-3 FIG. 02

5. Select the course. Use the steering wheel to select the course and confirm your selection with the gas pedal.

In Versus Mode, course confirmation is decided by the most votes. If 2 courses have the same number of votes, then the course with the lowest difficulty rating will be chosen.

8-3 FIG. 03

6. The TIPS Screen shows a tutorial on this title.

1-3 FIG. 04

7. The information displayed on the game screen is shown below.
The information displayed on the screen varies in Single Player Mode (Race), Single Player Mode (Time Attack), and Versus Mode.

■ Single Player Mode (Race)
8-3 FIG. 05

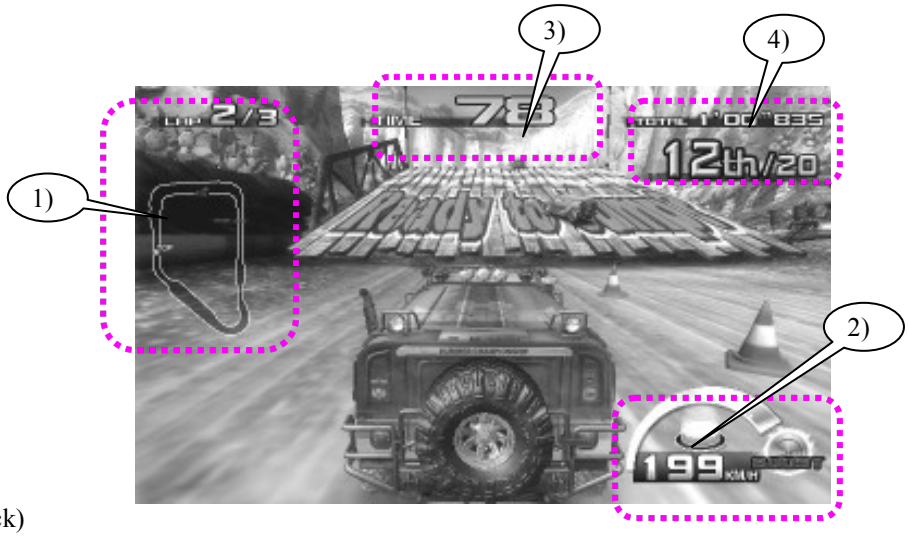

1) Number of laps, map
2) Boost Gauge, speedometer
3) Remaining time
4) Lap time, position

■ Single Player Mode (Time Attack)
8-3 FIG. 06

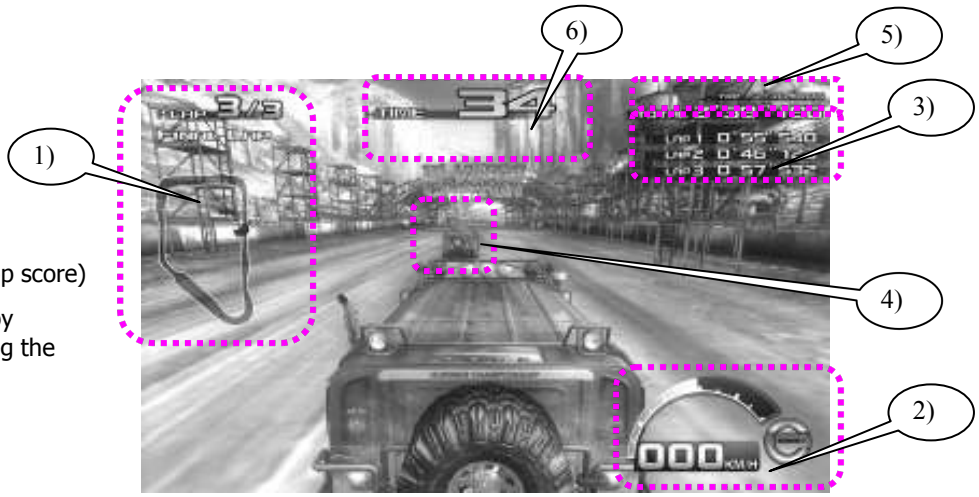

1) Number of laps, map
2) Boost Gauge, speedometer
3) Lap times
4) Top player's ghost data (only displayed if you are not in the top score)
The display can be turned OFF by pressing the START button during the game.
5) Time of player in 1st place
6) Remaining time

■ Versus Mode
8-3 FIG. 07

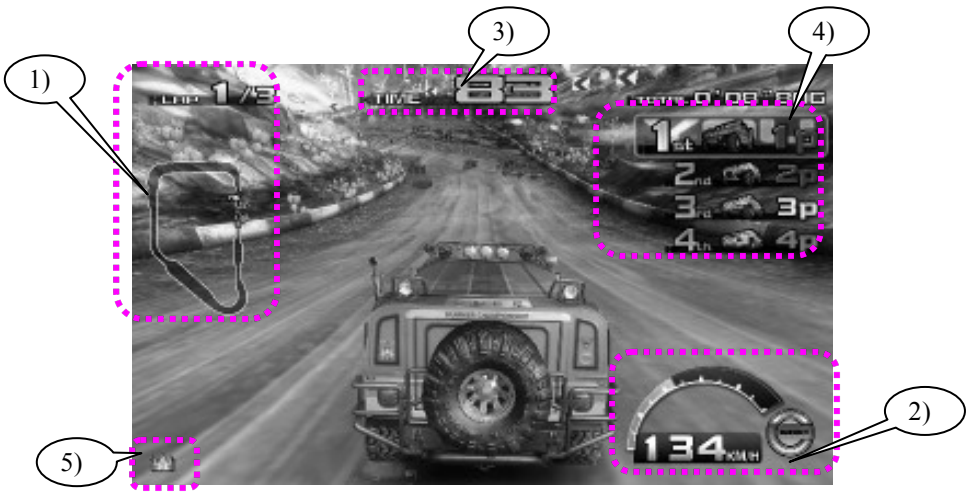

1) Number of laps, map
2) Boost Gauge, speedometer
3) Remaining time
4) Position
5) Victory mark

VS MODE 1ST CONTINUE (1st Place Continue Setting)

If the VS MODE 1ST CONTINUE setting under GAME TEST MODE > GAME ASSIGNMENTS is set to "ON," the player that comes in 1st place in VS mode can continue free of charge.
If a match is set, versus play continues, but if no opponent comes in, the player can press the START button to play in SINGLE RACE mode. (The default setting is "OFF.")

8-3 FIG. 08

8. When the race is over, results will be displayed (Result Screen). The information displayed on-screen will vary depending on the mode.

9. If you achieve a Ranking in the Time Attack mode, you can enter your name. This name (4 English letters) will be displayed on the advertising screen.
Use the steering wheel to select the letters and enter your selection with the gas pedal or the Start button.

10. After the race is finished, if you select "YES" in answer to "TRY AGAIN?" on the Try Again screen, the selections for the next game will begin from course selection.

8-4 HINTS FOR PLAYING THE GAME

● DRIFT
By lightly pressing the brake and turning the steering wheel dramatically before entering a turn, you can “Drift” through the turn in a skid.
There are also some special corners that can only be taken by drifting.

● BOOST
Boost is accumulated by destroying obstacles on the course.
When the Boost Gauge at the bottom right of the screen reaches its maximum level, you can use the BOOST button. By pressing the BOOST button, you can accelerate rapidly for a given length time until the Boost Gauge will be emptied.

● LANDING
Land by releasing the gas pedal immediately after a jump and pushing it again right before hitting the ground.
When landing, if you can control the car to make all 4 tires touch the ground at the same time, you will get Bonus Boost by degree of success.

- GOOD LANDING:	+20 % Bonus Boost
- EXCELLENT LANDING:	+30 % Bonus Boost
- FANTASTIC LANDING:	+50 % Bonus Boost
- AMAZING LANDING:	+100 % Bonus Boost

The highest landing evaluation, AMAZING LANDING, is a special bonus granted when the jump exceeds a certain distance. The higher the speed, the longer the jump, so try to use the BOOST button right before the ramp.

● TAKE DOWN
Opponents can be made to crash (taken down) by rear-ending them while boosting.
Successful take downs result in bonus boosts, so if you see an opponent, try to aim for them.

● BOOST COMBO
Performing an action leading to a BOOST GAIN during a boost (DESTRUCTION, LANDING, TAKE DOWN) results in a COMBO. COMBOs are displayed in the bottom right of the screen. The longer the boost time, the higher the COMBO score.

9. EXPLANATION OF TEST AND DATA DISPLAY

⚠ WARNING

● Do not touch any parts that are not specified in these directions. Touching unspecified locations may lead to electric shock or cause short circuits.

(STOP) IMPORTANT

● When you enter the Test Mode, fractional coin and bonus adder data is erased.

● Adjust the sound to the optimum volume, taking into consideration the environmental requirements of the installation location.

● Removing the coin meter circuitry renders the game inoperable.

Perform tests and data checks periodically by manipulating the TEST Button and SERVICE Button inside the cabinet. Follow the instructions in this chapter to conduct checks when the game machine is first installed, when money is being collected, or when the game machine does not operate properly.
Shown below are the tests and screens to be used for different problems.

This product uses a LINDBERGH game board and a DVD DRIVE. In the system, a different game can be played by putting a different DVD ROM in the DVD DRIVE.
For this reason, the product's Test Mode consists of two modes: a System Test Mode for systems in which coin settings, for instance, are made for products that use the same system, and a Game Test Mode for setting of difficulty level, etc., and for input/output test of operational units used exclusively with this product.

NOTE: "S/M" in the table denotes LINDBERGH Service Manual, which is provided separately.

9 TABLE 01

ITEMS	DESCRIPTION	REFERENCE SECTIONS
Game machine installation	1. Confirm that the information display screen appears in normal fashion.	"S/M" Chapter 4
	2. Investigate each input device on the Input Test Screen.	This manual 2-3-2, "S/M" Chapter 4
	3. Investigate each output device on the Output Test Screen.	This manual 2-3-3, "S/M" Chapter 4
Periodic maintenance	1. Check settings.	This manual 2-3, "S/M" Chapter 4
	2. Test each input device on the Input Test Screen.	This manual 2-3-2, "S/M" Chapter 4
	3. Test each output device on the Output Test Screen.	This manual 2-3-3, "S/M" Chapter 4
Monitor problem	On the monitor adjustment check screen, check to be sure the monitor has been adjusted properly.	"S/M" Chapter 4, Owner's Manual
IC board problem	1. Information Display Screen	"S/M" Chapter 4
	2. Speaker Test	"S/M" Chapter 4
Data Check	Check data on game play times, histograms, etc.	This manual 2-3-7

9-1 SWITCH UNIT

In Test Mode, the switch unit in the switch unit door is operated.
Unlock and open the switch unit door. Inside is a switch unit.

9-1 FIG. 01

1) SWITCH UNIT DOOR

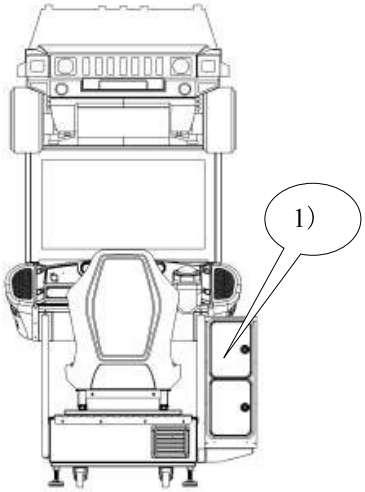

9-1 FIG. 02

1) TEST BUTTON / TEST
2) SERVICE BUTTON / SERVICE
3) SOUND VOLUME KNOB / VOLUME

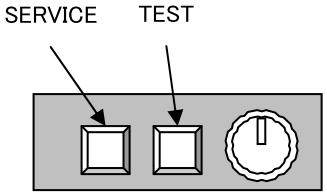

TEST Button（TEST）	Establishes Test Mode. Becomes the button to confirm selections in Test Mode.
SERVICE Button（SERVICE）	Makes it possible to enter credits for service without increasing the coin meter. Becomes the button to select items in Test Mode.
Sound Volume Knob（VOLUME）	This is the volume knob for speakers at the left and right of the control panel. Turn the knob to the right to increase speaker volume.

9-2 SYSTEM TEST MODE

(STOP) IMPORTANT

● The details of changes to Test Mode settings are saved when you exit from Test Mode by selecting EXIT from the system Test Mode menu. Be careful because if the power is turned off before that point, changes to the settings will be lost.

● Use with the specified settings. If settings other than those specified are used, inappropriate operations or malfunction may occur.

In the System Test Mode, the main activities include checking LINDBERGH information and actions and the setting of coin/credit. Also, a screen appears for checking screen adjustments. For details, see the LINDBERGH Service Manual, which is provided separately.

Use the following settings with this product. If the settings are not as specified, error messages might appear and operations might not be normal.

COIN ASSIGNMENTS

COIN CHUTE TYPE		COMMON
SERVICE TYPE		COMMON
GAME COST SETTING	CREDIT(S) TO GAME START	Number of credits required to start the game.
	CREDIT(S) TO CONTINUE	Number of credits required to continue the game.

NETWORK SETTING

NETWORK TYPE		MAIN
MAIN NETWORK	DHCP	ENABLE

1. When the TEST Button is pressed, the System Test Menu Screen (SYSTEM TEST MENU) appears.

9-2 FIG. 01

```
SYSTEM TEST MENU

SYSTEM INFORMATION
STORAGE INFORMATION
JVS TEST
MONITOR TEST
SPEAKER TEST
COIN ASSIGNMENTS
CLOCK SETTING
NETWORK SETTING
GAME TEST MODE
-> EXIT

SELECT WITH SERVICE AND PRESS TEST
```

2. Use the SERVICE Button to move the cursor to the desired test item.

3. Press the TEST Button to confirm selection of the item.

4. When testing and checking are completed, select EXIT and press the TEST Button. The System Test Menu Screen reappears.

5. When all tests are completed, select EXIT and press the TEST Button. The game screen reappears.

9-3 GAME TEST MODE

(STOP) IMPORTANT

● To change settings in the Game Test Mode, simply making changes on the setting screen will not be effective. Complete the Test Mode in normal fashion.

● Use with the specified settings. If settings other than those specified are used, inappropriate operations or malfunction may occur.

9-3-1 GAME TEST MODE

1. Select GAME TEST MODE from the System Test Menu Screen to display the Game Test Mode Screen as follows.

9-3-1 FIG. 01

```
                GAME TEST MODE

          INPUT TEST
          OUTPUT TEST
          GAME ASSIGNMENTS
          STEERING FORCE FEEDBACK
          CALIBRATION SETTING
          BOOKKEEPING
          BACKUP DATA CLEAR
   ->     EXIT


          SELECT WITH SERVICE BUTTON
            AND PRESS TEST BUTTON
```

2. For each following item, a test or setting is implemented, or data is displayed.

2-3-2	INPUT TEST	Tests each input device used for game.
2-3-3	OUTPUT TEST	Tests each output device used for game.
2-3-4	GAME ASSIGNMENTS	Adjusts all game settings.
2-3-5	STEERING FORCE FEEDBACK	Adjusts and Tests the STEERING.
2-3-6	CALIBRATION SETTING	Corrects all calibration values.
2-3-7	BOOKKEEPING	Displays all recorded game data.
2-3-8	BACKUP DATE CLEAR	Erases all types of game records.

3. Use the SERVICE Button to move the cursor to the desired test item. Press the TEST Button to select the test item.

4. After changing the settings, select EXIT and press the TEST Button to return to the Game Test Menu Screen.

5. On the GAME TEST MODE screen, select EXIT and press the TEST Button. The SYSTEM TEST MENU screen reappears.

9-3-2 INPUT TEST

Select INPUT TEST to display the following screen and check the status of input devices.
This test should be used periodically to check that each input device is functioning correctly.

1. On the GAME TEST MODE screen, select INPUT TEST and press the TEST Button. The INPUT TEST screen appears.

9-3-2 FIG. 01

```
                    INPUT TEST



STEERING                **H
GAS                     **H
BRAKE                   **H

START                   OFF
VIEW CHANGE                     OFF
BOOST                   OFF
TEST                    OFF
SERVICE                 OFF



        PRESS TEST AND SERVICE TO EXIT
```

2. Manipulate each switch, etc., to check screen display.

Test the STEERING, GAS and BRAKE controls to ensure that they are functioning properly and that the parameters change smoothly as each input device is operated. The STEERING value will decrease when the steering wheel is turned to the left and increase when turned to the right.

Other controls are working properly if the OFF display changes to ON when operating the corresponding input device.

9-3-2 FIG. 02

1) START BUTTON (START)
2) VIEW CHANGE BUTTON (VIEW CHANGE)
3) BOOST BUTTON (BOOST)
4) STEERING
5) BRAKE
6) GAS

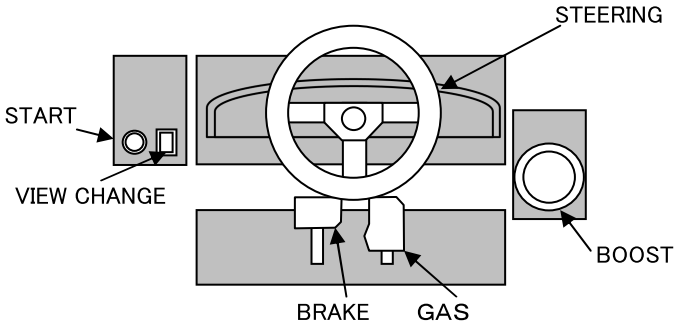

3. When all checks are completed, press the TEST Button and the SERVICE Button simultaneously. The GAME TEST MODE screen reappears.

9-3-3 OUTPUT TEST

This screen is for confirming the proper operation of each output device used by the game.
Periodically use this screen to check the status of each output device.

1. On the GAME TEST MODE screen, select OUTPUT TEST and press the TEST Button. The OUTPUT TEST screen appears.

9-3-3 FIG. 01

```
                    OUTPUT TEST



     START LAMP                    OFF
     VIEW CHANGE LAMP              OFF
     BOOST LAMP                    OFF
     HEAD LAMP
->       OFF
     EXIT

          SELECT WITH SERVICE BUTTON
             AND PRESS TEST BUTTON
```

2. Each item is explained below.

Press the TEST Button on an item to change the condition to ON, turning on its indicator light. Press the TEST Button again to change the condition to OFF, turning off the light.

9-3-3 FIG. 02

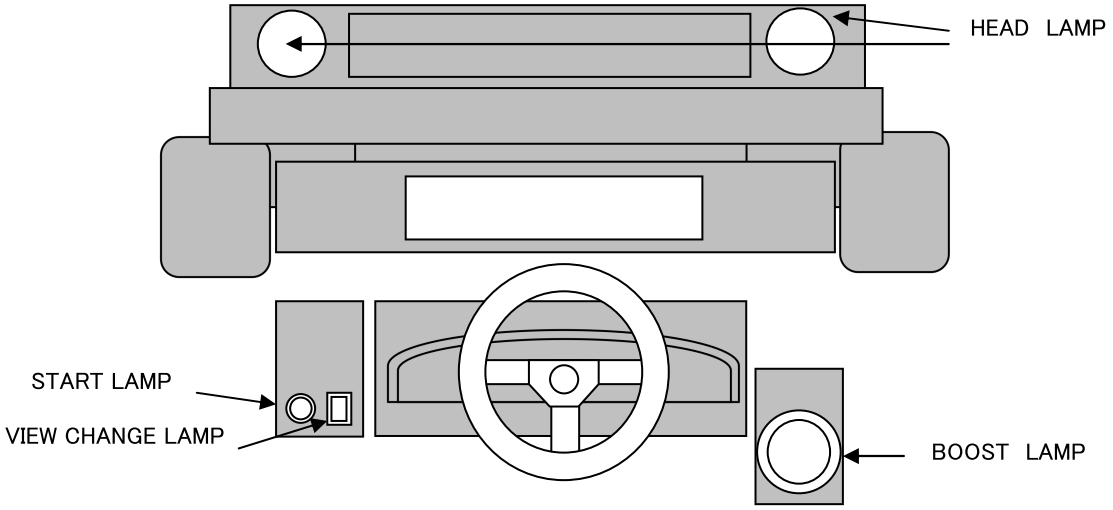

3. Press the SERVICE Button and move the cursor to select the item (output device).

4. When all checks are completed, select EXIT and press the TEST Button. The GAME TEST MODE screen reappears.

9-3-4 GAME ASSIGNMENTS

(STOP) IMPORTANT

● Ensure that you set up each cabinet correctly. Incorrect settings can lead to malfunctions.

● Players using cabinets with lower LINK ID numbers start further to the left in "Versus Mode." When positioning cabinets, ensure that you arrange them so that the LINK ID numbers increase from left to right.

All settings such as level of game difficulty are adjusted.
Setting changes do not become effective until EXIT has been selected on the GAME TEST MODE screen. After a setting has been changed, be sure to always exit the GAME TEST MODE.

1. On the GAME TEST MODE screen, select GAME ASSIGNMENTS and press the TEST Button. The GAME ASSIGNMENTS screen appears.

9-3-4 FIG. 01

```
                GAME ASSIGNMENTS


      DIFFICULTY                NORMAL
      ADVERTISE SOUND           ON
      SPEEDOMETER
            KM/H
      TOTAL MACHINE             1
      LINK ID                   1
      VS MODE 1ST CONTINUE      OFF
 ->   SYSTEM LANGUAGE           ENGLISH
      EXIT
          SELECT WITH SERVICE BUTTON
             AND PRESS TEST BUTTON
```

2. Each item is explained below.

DIFFICULTY	Set level of difficulty to one of 5 levels by time extension. VERY EASY is the easiest, and VERY HARD is the most difficult. (Default setting: NORMAL) *NOTE: Can only be set on cabinet with LINK ID "1", and other communicating cabinets also set accordingly.*
ADVERTISE SOUND	Set sound on the advertising screen. (Default setting: ON)
SPEEDOMETER	Set the speedometer to display speed in kilometers per hour (KM/H) or miles per hour (MPH). (Default setting: MPH <USA>, KM/H <Others>)
TOTAL MACHINE	Set how many cabinets can play. Set a number 1, 2, 3 or 4 depending on the total number of units connected. (Default setting: 1) Set the cabinet to 1 if it is not for Versus Mode.
LINK ID	Assign an ID to the cabinet. Choose from 1, 2, 3 or 4. (Default setting: 1). Set the LINK ID numbers so that all communicating cabinets have different numbers. When positioning cabinets, ensure that you arrange them so that the LINK ID numbers increase from left to right.
VS MODE 1ST CONTINUE	Set the 1st place continue setting for VS mode (Default: OFF). When this setting is set to "ON," the player that comes in 1st place in VS mode will be able to continue free of charge. *NOTES:* *- When this setting is set to "ON," there will be a difference between the number of credits entered and the number of plays in BOOKKEEPING.* *- Can only be set on cabinet with LINK ID "1", and other communicating cabinets also set accordingly.*
SYSTEM LANGUAGE	Set the language for in-game messages (Default: ENGLISH). If set to "CHINESE," the in-game messages will be displayed in simplified Chinese characters. *NOTE: Only displayed on cabinets for which the region is set to EXPORT.*

3. Use the SERVICE Button to move the cursor to the desired test item. Press the TEST Button to select the test item.

4. When all setting adjustments are completed, select EXIT and press the TEST Button. The GAME TEST MODE screen reappears.

9-3-5 STEERING FORCE FEEDBACK

This screen is for setting the strength of the steering wheel's force feedback and checking the operation of the steering wheel motor.
Periodically use this screen to check that the steering wheel motor is operating normally.
Changes to the settings do not become effective until EXIT has been selected on the GAME TEST MODE screen.
After a setting has been changed, be sure to always exit the GAME TEST MODE.
Also, always perform the steering wheel motor initialization operation before checking the steering wheel motor.

1. On the GAME TEST MODE screen, select STEERING FORCE FEEDBACK and press the TEST Button. The STEERING FORCE FEEDBACK screen appears.

9-3-5 FIG. 01

```
STEERING FORCE FEEDBACK

FORCE                    NORMAL
INITIALIZE          COMPLETED

LEFT                     OFF
CENTER                   OFF
RIGHT                    OFF

-> EXIT

SELECT WITH SERVICE BUTTON
AND PRESS TEST BUTTON
```

2. Each item is explained below.

FORCE	The force on the steering wheel can be set at 2 different levels; SOFT or NORMAL. (Default setting: NORMAL)
INITIALIZE	Performs initialization operation for steering wheel motor. When selected, "INITIALIZING" is displayed and the steering wheel moves automatically. Do not touch the steering wheel until "COMPLETED" is displayed and the steering wheel has completely stopped moving.
LEFT RIGHT CENTER	The motor moves each seat's steering wheel allowing its operation to be checked. Turn the steering wheel left and right when the screen indicates LEFT and RIGHT. When CENTER is displayed, the steering wheel will return to the center.

3. Use the SERVICE Button to move the cursor to the desired test item. Press the TEST Button to select the test item.

4. When all setting adjustments are completed, select EXIT and press the TEST Button. The GAME TEST MODE screen reappears.

9-3-6 CALIBRATION SETTING

This screen is for adjusting and confirming the status of the steering wheel, gas pedal, and brake pedal. Periodically use this screen to confirm that each setting is appropriate. Also, when replacing the volume, use this screen to make adjustments.
Setting changes do not become effective until EXIT has been selected on the GAME TEST MODE screen. After a setting has been changed, be sure to always exit the GAME TEST MODE.

1. On the GAME TEST MODE screen, select CALIBRATION SETTING and press the TEST Button. The CALIBRATION SETTING screen appears.

9-3-6 FIG. 01

```
                CALIBRATION SETTING

                    STEERING
                    GAS
                    BRAKE
  ->                EXIT


          SELECT WITH SERVICE BUTTON
            AND PRESS TEST BUTTON
```

2. Each item is explained below.

STEERING	Sets the center position for the steering wheel.
GAS	Sets the maximum and minimum values for the gas pedal.
BRAKE	Sets the maximum and minimum values for the brake pedal.

3. Use the SERVICE Button to move the cursor to the desired test item. Press the TEST Button to select the test item. The settings screen for the selected item appears.

4. When all checks are completed, select EXIT and press the TEST Button. The GAME TEST MODE screen reappears.

STEERING (Steering Wheel Calibration Setting)

9-3-6 FIG. 02

```
CALIBRATION SETTING

<STEERING>

** H        (** H)

  SET CENTER & EXIT
->CANCEL & EXIT

SELECT WITH SERVICE BUTTON
AND PRESS TEST BUTTON
```

1. Hold the steering wheel to be set in the center position. The center number (hexadecimal) will change. The number in parenthesis is the currently recorded setting value.
If it is significantly off the center position, the cursor will automatically select CANCEL & EXIT, and the setting will not be able to be made.

2. Select SET CENTER & EXIT and press the TEST Button to set the new value and return to the CALIBRATION SETTING screen.

3. Select CANCEL & EXIT and press the TEST Button to return to the CALIBRATION SETTING screen without saving the new setting.

GAS (Gas Pedal Calibration Setting)

92-3-6 FIG. 03

```
CALIBRATION SETTING

<GAS>

  MAX      ** H   (** H)
  MIN ** H   (** H)

  SET & EXIT
->CANCEL & EXIT

SELECT WITH SERVICE BUTTON
AND PRESS TEST BUTTON
```

1. Press completely the gas pedal you are setting and then release it. The center number (hexadecimal) will change. MAX is the value when the pedal was pressed completely, and MIN is the value when the pedal was released. The number in parenthesis is the currently recorded setting value.

2. SET & EXIT will become selectable once the gas pedal is pressed and it goes to an appropriate value. Select SET & EXIT and press the TEST Button to set the new value and return to the CALIBRATION SETTING screen.

3. Select CANCEL & EXIT and press the TEST Button to return to the CALIBRATION SETTING screen without saving the new setting.

BRAKE (Brake Pedal Calibration Setting)

9-3-6 FIG. 04

```
                CALIBRATION SETTING

                      <BRAKE>

                MAX        ** H   (** H)
                MIN ** H   (** H)


                SET & EXIT
            —>  CANCEL & EXIT


              SELECT WITH SERVICE BUTTON
                AND PRESS TEST BUTTON
```

1. Press completely the brake pedal you are setting and then release it. The center number (hexadecimal) will change. MAX is the value when the pedal was pressed as hard as possible, and MIN is the value when the pedal was released. The number in parenthesis is the currently recorded setting value.

2. SET & EXIT will become selectable once the brake pedal is pressed and it goes to an appropriate value. Select SET & EXIT and press the TEST Button to set the new value and return to the CALIBRATION SETTING screen.

3. Select CANCEL & EXIT and press the TEST Button to return to the CALIBRATION SETTING screen without saving the new setting.

9-3-7 BOOKKEEPING

Each game record can be viewed.

1. On the GAME TEST MODE screen, select BOOKKEEPING and press the TEST Button. The BOOKKEEPING 1/2 screen appears.

9-3-7 FIG. 01

```
                BOOKKEEPING 1/2
COIN 1                          *
COIN 2                          *
TOTAL COINS                     *

COIN CREDITS                    *
SERVICE CREDITS                 *
TOTAL CREDITS                   *

TIME ATTACK GAMES               * (*)
RACE MODE GAMES                       *
(*)
VS MODE GAMES                   * (*)
TOTAL GAMES                     * (*)

TOTAL TIME                  *D  *H  *M  *S

    PRESS TEST BUTTON TO CONTINUE
```

2. Each item is explained below.

NOTE: If the VS MODE 1ST CONTINUE setting under GAME ASSIGNMENT is set to "ON," the CONTINUE PLAY for the player that came in 1st place in VS mode will be counted as 1 play.

COIN 1	Number of coins inserted in coin chute 1.
COIN 2	Number of coins inserted in coin chute 2.
TOTAL COINS	Total number of coins inserted in all coin chutes.
COIN CREDITS	Number of credits for coins inserted.
SERVICE CREDITS	Number of credits entered with the SERVICE Button.
TOTAL CREDITS	Total number of all credits.
TIME ATTACK GAMES	Number of times played in Time Attack Mode. The number in parenthesis is the number of continues.
RACE GAMES	Number of times played in Race Mode. The number in parenthesis is the number of continues.
VS MODE GAMES	Number of times played in VS Mode. The number in parenthesis is the number of continues.
TOTAL GAMES	Total number of games played. The number in parenthesis is the number of continues.
TOTAL TIME	Amount of time the cabinet has been in operation.
PLAY TIME	Amount of time game has been played.

NOTE: When VS MODE 1ST CONTINUE under GAME ASSIGNMENTS is set to "ON," there will be a difference between the number of credits entered and the number of plays.

3. Press the TEST Button to move to the next page.

9-3-7 FIG. 02

```
BOOKKEEPING 2/2

TIME HISTOGRAM

0M 00S – 2M 59S        *
3M 00S – 3M 29S        *
3M 30S – 3M 59S        *
4M 00S – 4M 29S        *
4M 30S – 4M 59S        *
5M 00S – 5M 29S        *
5M 30S – 5M 59S        *
6M 00S – 6M 29S        *
6M 30S – 6M 59S        *
7M 00S – 7M 29S        *
OVER     7M 30S        *

AVERAGE PLAY TIME      *M  *S
LONGEST PLAY TIME      *M  *S
SHORTEST PLAY TIME     *M  *S

PRESS TEST BUTTON TO EXIT
```

4. Each item is as shown below.

TIME HISTOGRAM	Displays the distribution of play times in 30 seconds intervals. Play times under 3 minutes are included in “0M 00S - 2M 59S”, and play times of 7.5 minutes and above are included in “OVER 7M 30S”.
AVERAGE PLAY TIME	Average play time for all plays.
LONGEST PLAY TIME	Longest amount of time game has been played on all plays.
SHORTEST PLAY TIME	Shortest amount of time game has been played on all plays.

5. When all checks are completed, press the TEST Button to return to the GAME TEST MODE screen.

9-3-8 BACKUP DATA CLEAR

Delete all game records (game scores and GAME TEST MODE; BOOKEEPING data).

1. On the GAME TEST MODE screen, select BACKUP DATA CLEAR and press the TEST Button. The BACKUP DATA CLEAR screen appears.

9-3-8 FIG. 01

```
BACKUP DATA CLEAR

CLEAR ALL BACKUP DATA

      YES  (CLEAR)
-> NO   (CANCEL)

SELECT WITH SERVICE BUTTON
AND PRESS TEST BUTTON
```

2. Select item to either clear data or to cancel the function, and then confirm with the TEST Button.

YES (CLEAR)	All game records are cleared. After clearing, “COMPLETED” is displayed.
NO (CANCEL)	All game records are not cleared.

3. When YES (CLEAR) has been selected and the TEST Button pressed, all data is cleared. Then “COMPLETED” is displayed and press the TEST Button to return to the GAME TEST MODE screen.
Move the cursor to NO (CANCEL) and press the TEST Button to return to the GAME TEST MODE screen without clearing the data.

9-3-8 FIG. 02

```
BACKUP DATA CLEAR

CLEAR ALL BACKUP DATA

-> YES (CLEAR)
   COMPLETED

PRESS TEST BUTTON TO EXIT
```

10. ERROR DISPLAY

⚠ WARNING

● If there is an error display, search out the cause immediately and take corrective action. If the product is operated while the error is ignored, there could be an accident. There could also be permanent damage to parts, etc.

● If an error is displayed, have the site maintenance personnel or other qualified individuals resolve it. If someone without specialized or technical knowledge attempts to rectify the problem, electric shock, short circuits or fire may result. If there is no site maintenance personnel or other qualified individuals available, turn the power off immediately, and contact your retailer or the office listed in this manual.

● If a problem not described in this manual and the LINDBERGH Service Manual occurs, or the resolution to a problem described in this manual is not effective, do not make further attempts to resolve the problem yourself. Immediately turn off the power and contact your retailer or the office listed in this manual. Any unguided attempts to solve such problems may lead to a serious accident.

● If countermeasures given in this manual have been taken and there are still no improvements, contact your retailer or the office listed in this manual.

When this product detects an abnormality, the following messages will be displayed. Note the information about the error when managing the problem. For error messages displayed at the LINDBERGH logo screen, consult the LINDBERGH Service Manual.

Error 39	Unexpected Error
Displayed when the correct key chip is not connected.	
Check to make sure the correct key chip is connected.	

Error 1001	There is an error in the COIN ASSIGNMENTS SETTINGS.
Displayed when the COIN ASSIGNMENTS settings are wrong in SYSTEM TEST mode.	
Check to make sure SYSTEM TEST MODE＞COIN ASSIGNMENTS＞COIN CHUTE TYPE and SERVICE TYPE are both set to COMMON.	

Error 1002	There is an error in the NETWORK SETTINGS.
Displayed when the NETWORK SETTING is wrong.	
Check that SYSTEM TEST MODE > NETWORK SETTING > MAIN NETWORK > DHCP is set to ENABLE.	

Error 1011	The CALIBRATION SETTING has not been set correctly.
Displayed when CALIBRATION SETTING has not been carried out correctly.	
Carry out GAME TEST MODE > CALIBRATION SETTING.	

Error 1201	Unable to recognize STEERING MOTOR DRIVE BD.
Unable to recognize STEERING MOTOR DRIVE BD.	
Check to see if the test can be performed under GAME TEST MODE > STEERING FORCE FEEDBACK. If not, there is likely a problem with the wiring or the MOTOR DRIVE BD.	

Error 1202	The STEERING MOTOR did not initialize successfully.
The STEERING MOTOR did not initialize successfully.	
Remove anything that is obstructing the movement of the steering wheel. If the error message still appears after restoring power to the cabinet, there may be a fault in the wiring, the MOTOR DRIVE BD, or the motor.	

Error 1203	The STEERING MOTOR is using abnormal encoder data.
The STEERING MOTOR is using abnormal encoder data.	
If the error message still appears after restoring power to the cabinet, there may be a fault in the wiring, the MOTOR DRIVE BD, or the motor.	

Error 1204	An overcurrent has passed through the STEERING MOTOR.
An overcurrent has passed through the STEERING MOTOR.	
If the error message still appears after restoring power to the cabinet, there may be a fault in the MOTOR DRIVE BD or the motor.	

Error 1205	The STEERING MOTOR has overheated.
The STEERING MOTOR has overheated.	
Disconnect power to the cabinet and wait for the temperature of the motor to drop. Then restore the power. If the error message appears frequently, there may be a fault in the MOTOR DRIVE BD or the motor.	

Error 1301	Unable to conduct internal cabinet communication connection.
Unable to conduct internal cabinet communication connection.	
If the error message still appears after restoring power to the cabinet, check that the LAN cable is connected correctly. Check that power is being supplied to the HUB. Check that the communication check screen is displayed on all the cabinets with communication connection.	

Error 1302	There is an error in the TOTAL MACHINE SETTING.
There is an error in the TOTAL MACHINE setting.	
Check that the number of communicating cabinets and the setting for GAME TEST MODE > GAME ASSIGNMENTS > TOTAL MACHINE are the same.	

Error 1303	There is an error in the LINK ID SETTING.
There is an error in the LINK ID setting.	
Check that the settings for GAME TEST MODE > GAME ASSIGNMENTS > LINK ID in communicating cabinets are not repeated.	

Error 1304	The cabinet which is being communicated with uses a different version of the game.
The cabinet which is being communicated with uses a different version of the game.	
Install the same version of the game.	

Error 1305	The cabinet which is being communicated with uses a different GAME BD region.
The cabinet which is being communicated with uses a different LINDBERGH region.	
Make the LINDBERGH regions the same.	

Error 1306	One or more cabinets have lost connection.
A cabinet has been disconnected during VS play.	
Check to make sure the LAN cable is properly connected and that power is being supplied to the HUB. If there are no problems, the connection will recover automatically after the game is finished.	

11. CONTROL PANEL (HANDLE MECHA)

⚠ WARNING

● In order to prevent an electric shock and short circuit, be sure to turn power off before performing work by touching the interior parts of the product.

● Be careful not to damage the wires. Damaged wires may cause electric shock or short circuit or present a fire risk.

● Do not touch undesignated places. Touching places not designated can cause electric shock or short circuit.

● This work should be performed by the site maintenance individual or other skilled professional. Performing work by non-technical personnel can cause electric shock hazard.

● Do not perform work other than those specified in this Manual in order to prevent accidents during performing work and operation after performing work. Performing work not specified in this Manual may require special training for this product. If performing work other than those stated in this manual is required for repair, contact the offices herein stated in this manual or where you purchased the product from and ask for repair or inquire how to repair.

● Be very careful when soldering. Handling a soldering iron carelessly may result in a fire or a burn.

● Be extremely careful when heating the heat-shrinkable tube. Failure to do so may result in a fire or burns.

● Immediately after the game is finished, the motor may still be very hot.

When performing the removal work, wait until the motor cools off.

● This unit is a heavy item weighing approximately 20kg (44.1 lb). Therefore, be very careful when performing the work. Use plural workers.

⚠ CAUTION

● Exercise extreme caution when handling the internal parts of the Control Panel. Watch out for damage, warping and loss. The loss of just one piece may result in damage to or lead to faulty operation of the entire unit.

● Be careful that your fingers do not get caught when opening and closing the control panel, adjusting the VR bracket, or performing other maintenance tasks.

● When securing the plastic-made parts, do not excessively fasten screws and nuts. Failure to observe this may damage the parts and cause injury due to fragments resulting from damage.

● Do not touch the steering wheel when switching on the unit. The steering wheel undergoes automatic initialization after the unit is switched on.

(STOP) IMPORTANT

Be sure to perform volume's move value setting in the INPUT ASSIGNMENTS in the Game Test Mode after replacing or adjusting the Volume.

In cases the Steering operability is poor and the adjustment of VOLUME SETTING in the TEST mode has no effect, the causes may be the volume gear's mesh failure and or volume malfunctioning.
Adjust volume gear mesh or replace the volume as per the following procedure.
In this product, when the steering wheel is moved fully left/right, if the volume shaft is rotating within the movable range, the volume is not feared to be damaged.
Secure the volume in the manner the volume shaft is oriented as shown and the gears are appropriately engaged when the steering wheel is in the centering position allowing the car to go straight forward.

11-1 REMOVING THE CONTROL PANEL

Hexagonal wrench is required for the following procedure.

1. Turn off the power.

2. Remove the 4 hexagon socket button head screws from both sides of the Control Panel's front part.

3. Remove the 2 hexagon socket button head screws from underside of the Control Panel.

4. Wiring connectors are connected inside the Control Panel. Be careful not to damage any of the wiring, and carefully pull out the Control Panel.

5. Unplug the wiring connectors.

11-2 ADJUSTING/REPLACING THE VOLUME

ADJUSTMENT PROCEDURE

1. Loosen the 2 screws that secure the VR Bracket and move the VR Bracket to adjust the angle and condition of the gear alignment.

2. Keeping the handle straight, align the gears so that the direction of the D Cut side of the V.R. Shaft matches that shown in the diagram.

3. Tighten the 2 screws and secure the VR Bracket.

4. Check to make sure the value on the Input Test screen is within the range 80H ± 8H when the steering unit is in the straight position.

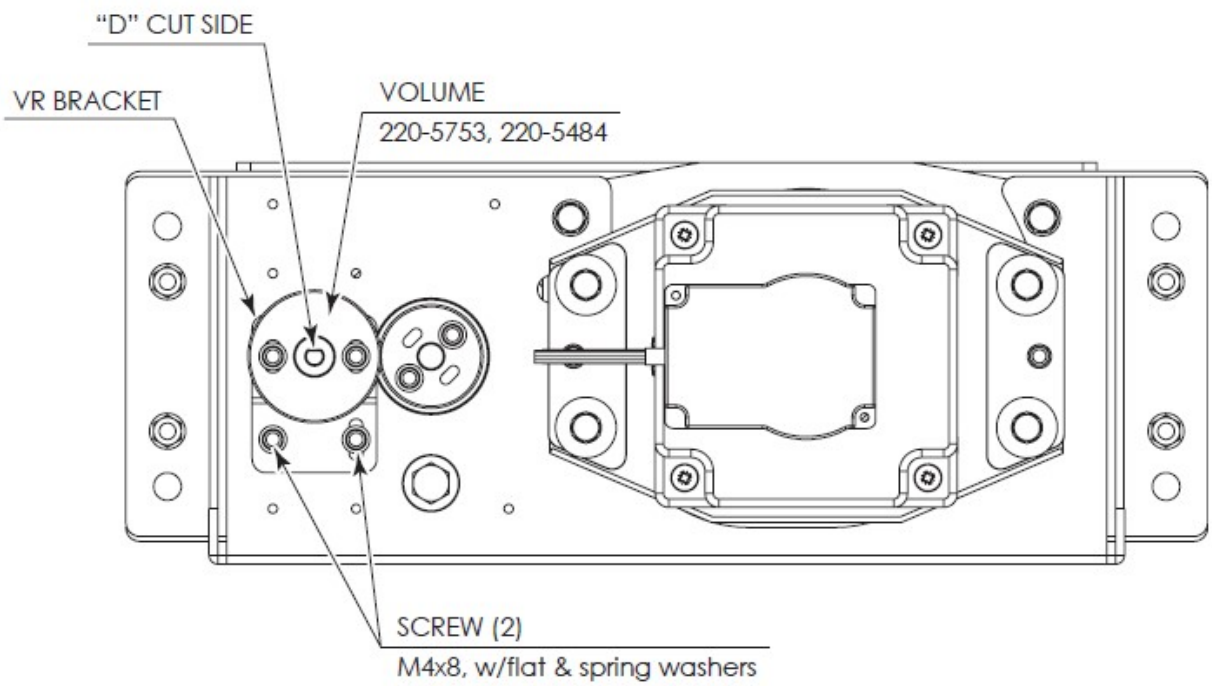

REPLACEMENT PROCEDURE

This procedure requires the following tools: Phillips screwdriver for the M4 screws, 1.5 mm hexagonal wrench, 11-12 mm monkey wrench, nipper, cutter, wire stripper, soldering iron, industrial dryer and heat-shrinkable tube.

1. Remove the connectors.

2. Remove the 2 screws securing the VR Bracket and remove the entire Bracket and V.R.

3. Loosen the 2 hexagon socket screws on the Gear Holder and remove the Gear Holder.

4. Remove the nut securing the VR Bracket, then separate the Volume from the VR Bracket and replace it.

5. Check to make sure the value on the Input Test screen is within the range 80H ± 8H when the steering unit is in the straight position.

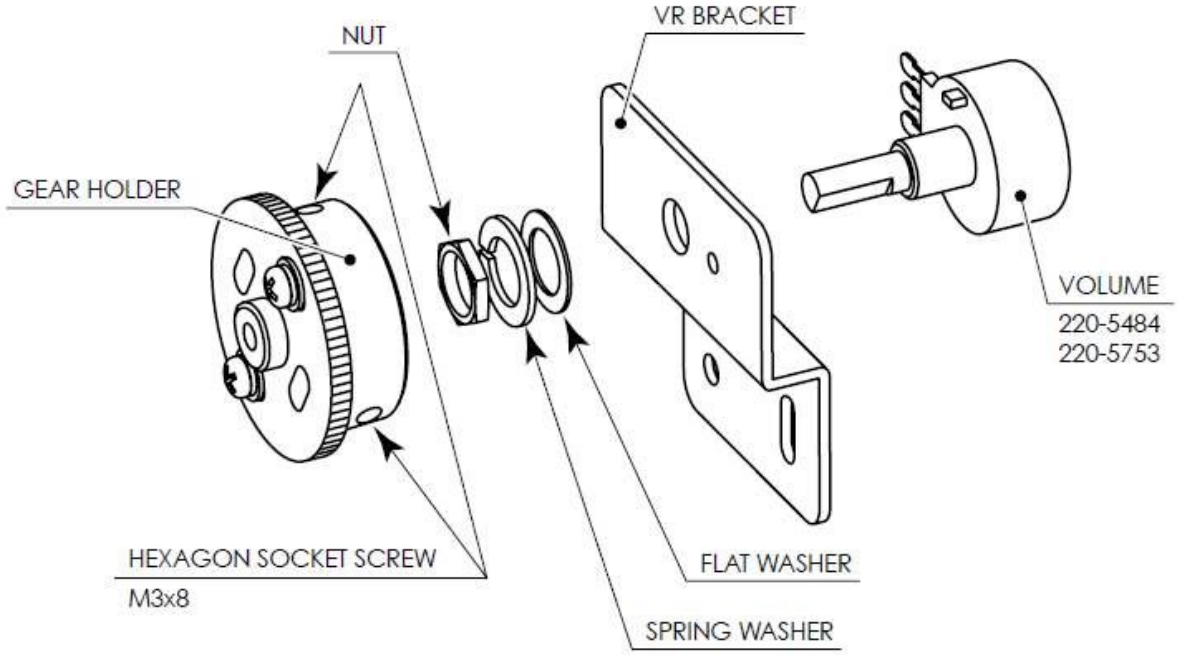

11-3 GREASING

(STOP) IMPORTANT

- **Be sure to use the designated grease. Using undesignated grease can cause parts damage.**
- **Do not apply grease to locations other than as specified. Doing so may create a risk of operational problems and deterioration of parts.**
- **The designated periods for greasing serve only as a guide. Whenever there are squeaks or other anomalies, apply grease at designated locations.**

Use spray grease once every three months to grease up the gear mesh portion of the constituent parts.
Use "Grease Mate" (part number 090-0066) for the spray grease.

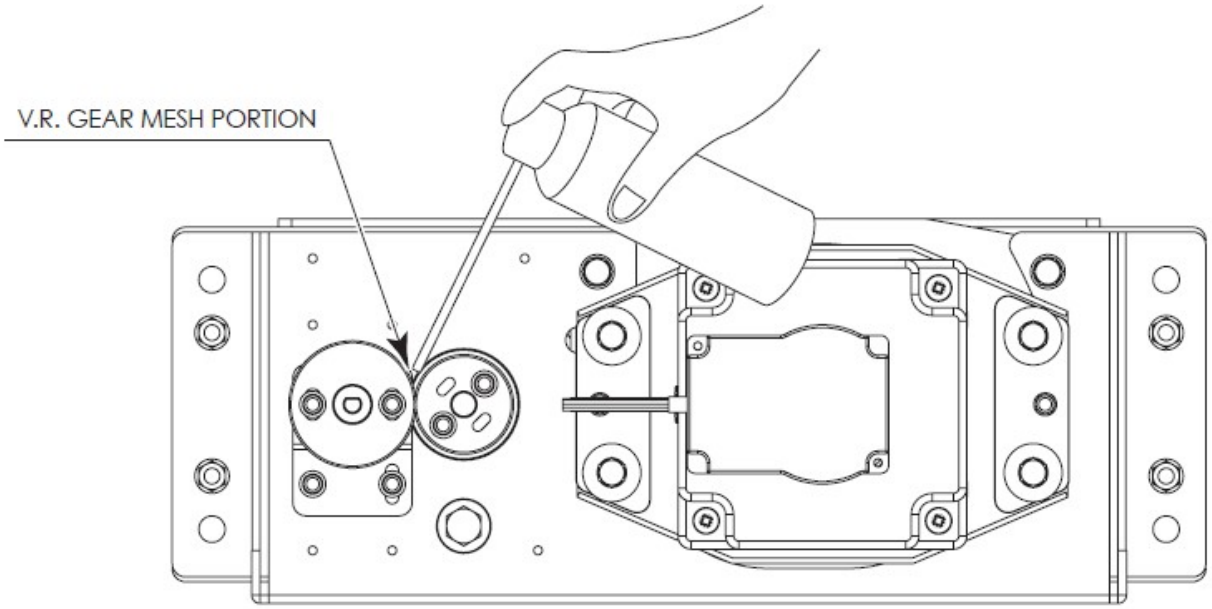

12. ACCELERATOR & BRAKE

⚠ WARNING

● Always disengage the power before beginning work. Otherwise there could be an electric shock or short circuit. Note that when using TEST mode there will be electricity running through the machine. Do not touch any parts that are not specified in these directions.

● Be careful not to damage the wires. Damaged wires may cause electric shock or short circuit or present a risk of fire.

● Do not touch undesignated places. Touching places not designated can cause electric shock or short circuit.

● This work should be performed by site maintenance personnel or other skilled professionals. Work performed by non-technical personnel can cause a severe accident such as an electric shock.

● To prevent accidents while working or while operating the product after it has been installed, be sure not to conduct any procedures other than those given in this manual. If a procedure not given in this manual is required, request service from the office given in this manual or from the point of purchase.

⚠ CAUTION

Do not touch the steering wheel when switching on the unit. The steering wheel undergoes automatic initialization after the unit is switched on.

(STOP) IMPORTANT

Be sure to perform volume's move value setting in the INPUT ASSIGNMENTS in the Game Test Mode after replacing or adjusting the Volume.

When the accelerator and brake pedal do not operate properly, either the volume attachment position must be adjusted, or the volume must be replaced. Also, the gear alignment position and spring should be greased once every three months.

12-1 VOLUME ADJUSTMENT AND REPLACEMENT

The appropriate value for acceleration volume is under 30H when released and over C0H when stepped on.
The appropriate value for brake volume is under 30H when released and over C0H when stepped on.
Check Volume values in the TEST mode.
Since work is performed inside the energized cabinet, be very careful so as not to touch undesignated places.
Touching places not specified can cause electric shock or short circuit.
The following tools are required for the operations below: Phillips screwdrivers for M4 and M5, hexagon wrench with measuring distance of 1.5 mm, and thread sealant.

ADJUSTING PROCEDURE

1. Turn off the power.

2. Remove two truss screws, and remove the front cover of the accelerator and brake.

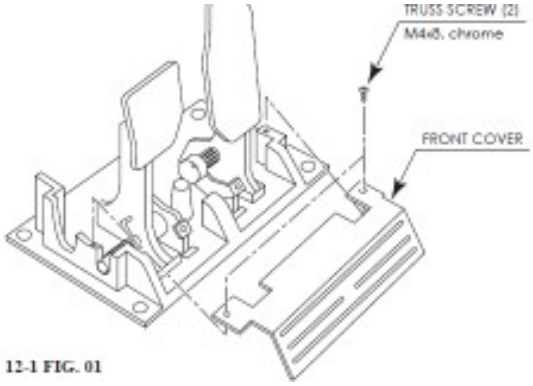

12-1 FIG. 01

3. Loosen the screw that secures the potentiobase, and adjust the volume values by moving the base.

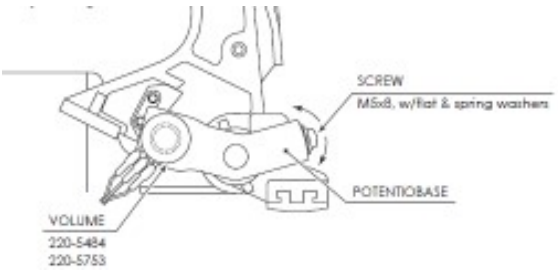

4. Fasten the potentiobase.

5. On the INPUT ASSIGNMENTS Screen in the Game Test Mode, set the volume values.

6. Confirm that the values change smoothly by operating the pedal.

REPLACING THE VOLUME

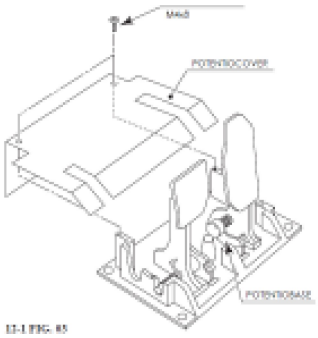

1. Turn off the power.
2. Remove two screws, and remove the potentiocover.
3. Undo the connector of the volume to be replaced.
4. Remove the screw that fastens the potentiobase.
5. With the volume still attached, remove the potentiobase.
6. Remove the base and the gears, and replace the volume. When attaching the volume, use the thread locker.
7. After replacement, set the volume as described in the “Adjusting Procedure” section above.
8. After adjusting the setting, confirm that the values change smoothly by operating the pedal.

12-2 GREASING

(STOP) IMPORTANT

Be sure to use the designated grease. Using undesignated grease can cause parts damage.

Grease the spring and gear alignment area once every three months.
Use GREASE MATE (PART No. 090-0066) as spray grease.

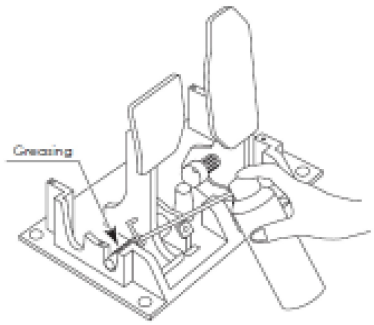

13. MONITOR (32” LCD)

13-1 SAFETY PRECAUTIONS WHEN HANDLING THE MONITOR

⚠ WARNING

Responding to breakdown or abnormality

● If smoke or a strange odor appears, immediately unplug the power cable from the power source.

Continuing to use the product may cause a fire or an electric shock. Ensure that smoke is no longer emitted, and contact the point of purchase.

● If nothing displays on the screen, immediately unplug the power cable from the power source.

Continuing to use the product may cause a fire or an electric shock. Contact the point of purchase and request an inspection.

● If water or a foreign object enters the monitor’ s interior, immediately unplug the power cable from the power source.

Continuing to use the product may cause a fire or an electric shock. Contact the point of purchase and request an inspection.

● If the monitor is dropped or the cabinet is damaged, immediately unplug the power cable from the power source.

Continuing to use the product may cause a fire or an electric shock. Contact the point of purchase and request an inspection.

During operation

● Do not repair, reconstruct, or disassemble the monitor.

The monitors interior contains high voltage parts. A fire or an electric shock could result.

For inspections, adjustments, and repair of the monitors interior, request work from the point of purchase.

● Do not insert foreign objects.

If metal objects or flammable materials such as paper are inserted into the interior through ventilation openings or other apertures, an electric shock could result.

● In the event of a thunder storm, do not touch the product or the power cable. An electric shock could result.

● Make sure to perform appropriate adjustments. Do not operate the product when the screen is flickering, distorted, or experiencing other abnormalities. Images from an improperly adjusted screen could cause players and other customers to experience dizziness, headaches, and other ailments.

13-2 CLEANING THE SCREEN SURFACE

⚠ CAUTION

● Use a soft, dry cloth (flannel-type) to wipe away dirt. Do not use materials such as coarse mesh gauze.

● Alcohol (ethanol) is the recommended solvent for removing dirt. When using a cleaning agent, follow the precautions below.

- Dilute neutral cleaning agents for home use with water. Soak a soft cloth in the solution, and wring it thoroughly before wiping the screen.

- Do not use abrasive cleaning agents or powders, or cleaning agents containing bleach.

- Do not use alkaline cleaning agents such as glass cleaners, or solvents such as thinners.

● Do not scrub or scratch the screen surface with abrasive materials such as brushes or scrub brushes.

CLEAN THE SCREEN SURFACE ONCE A WEEK.

14. PERIODIC INSPECTION

The items listed below require periodic check and maintenance to retain the performance of this machine and to ensure safe business operation.
When handling the controller, the player will be in direct contact with it. In order to always allow the player to enjoy the game, be sure to clean it regularly. Also, it is advisable to provide wet tissue, etc. available for player use.

⚠ WARNING

● Once a year, check to see if power cords are damaged, the plug is securely inserted, dust is accumulated between the socket outlet and the power plug, etc. Using the product with accumulated dust in the interior may cause fire or electric shock.

● Never use a water jet, etc. to clean the inside and outside of the cabinet. If wetness occurs for any reason, do not use the product until it has completely dried.

● Once a year, request the office shown on this manual or the dealer from whom the product was originally purchased to perform the internal cleaning. Using the product with accumulated dust in the interior may cause fire or other accidents.

Note that you are liable for the cost of cleaning the interior parts.

● There is the danger of accidents involving electrical shorts circuits or fire caused by factors such as the deterioration of insulation in electrical and electronic equipment over time. Check that there are no abnormalities such as odors from burning.

16 TABLE 01 PERIODIC INSPECTION TABLE

ITEMS	DESCRIPTION	PERIOD
CABINET	Confirm that adjusters contact floor	Daily
CONTROL PANEL	Volume inspection	Monthly
	Gear alignment inspection	Every 3 months
	Greasing	Every 3 months
SHIFT LEVER	Switch inspection	Monthly
	Greasing	Every 3 months
ACCELERATOR & BRAKE		
	Volume inspection	Monthly
	Gear and spring potion greasing	Every 3 months
MONITOR	Screen cleaning	Weekly
	Confirm settings	Monthly or when moving
COIN CHUTE DOOR	Coin switch inspection	Monthly
	Coin insertion test	Monthly
	Selector cleaning	Every 3 months
SEAT	Greasing to the seat rail	Every 3 months
GAME BD	Memory Test	Monthly
	Confirm settings	Monthly
POWER CABLES	Inspection, Cleaning	1 year
INTERIOR	Cleaning	1 year
CABINET SURFACES	Cleaning	As appropriate

Cleaning the Cabinet Surfaces

When the cabinet surfaces are badly soiled, remove stains with a soft cloth dipped in water or diluted (with water) chemical detergent and squeezed dry. To avoid damaging surface finish, do not use such solvents as thinner, benzine, etc. other than ethyl alcohol, or abrasives, bleaching agent and chemical dustcloth.
Some general-purpose household, kitchen and furniture cleaning products may contain strong solvents that degrade plastic components, coatings, and print. Before using any cleaning product, read the product's cautionary notes carefully and test the product first on a small area that is not highly visible.

Seat (Greasing to Seat Rail Portion)

Move the Seat to the rearmost position and apply spray greasing to the portion shown at the right once every 3 months by using NOK KLUBER L60 or GREASE MATE SEGA PART No. 090-0066.
After greasing, move the Seat a few times forward and backward so as to allow the grease to be applied all over uniformly.
Be sure to wipe grease which attaches to the surfaces of the PROTECT RUBBER on the Seat Rail, or any excess grease.

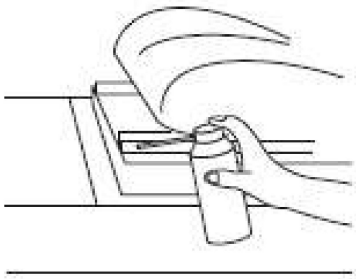

16⊠01

15. TROUBLESHOOTING

15-1 TROUBLESHOOTING (WHEN NO ERROR MESSAGE IS SHOWN)

⚠ WARNING

● In order to prevent electric shock and short circuit, be sure to turn power off before performing work.

● Be careful so as not to damage wirings. Damaged wiring can cause electric shock or short circuit.

● After removing the cause of the functioning of the Circuit Protector, reinstate the Circuit Protector. Depending on the cause of the functioning, using the Circuit Protector as is without removing the cause can cause generation of heat and fire hazard.

● In the event that a problem cannot be resolved by employing the procedures listed in this Manual, be sure to request service from the office shown on this Manual or the dealer from whom the product was originally purchased. Attempts to employ procedures other than those specified in this Manual can cause electrical shock, shorting, or fire.

● In the event of a problem that is not described here, be sure to contact the office shown on this Manual or the dealer from whom the product was originally purchased. Careless attempts at repair can result in electrical shock, shorting, or fire.

If a problem occurs, first check to make sure that the wiring connectors are properly connected.

PROBLEM	CAUSE	COUNTERMEASURES
When the main SW is turned ON, the machine is not activated.	The power is not ON.	Firmly insert the plug into the outlet.
	Incorrect power source/voltage.	Make sure that the power supply/voltage are correct.
	The Circuit Protector functioned due to momentary overcurrent.	After eliminating the cause of overload, have the Circuit Protector of the AC Unit restored. <6-6, See 17 FIG. 01.>
	The fuse of the connect board was blown out due to momentary overcurrent.	After eliminating the cause of overload, replace the specified rating fuse. <17 FIG. 01>
Fluorescent lamp inside FL box doesn't light up.	Connector connection fault.	Check connector connections between the Cabinet and the FL box.
	Fluorescent lamp and glow lamp need replacement.	Replace the fluorescent lamp and the glow lamp. <See Chapter 15.>
Sound is not emitted.	Sound volume adjustment is not correct.	Adjust the Switch Unit's sound adjustment volume. <See Chapter 9.>
	Faulty connections for various connectors.	Check the connections for the game board, amp, speakers and Volume connectors.
	Malfunctioning BD, amp and speaker.	Perform Sound Test. <See System Test Mode in LINDBERGH Service Manual.>

Sounds are emitted and the lamps are lit, but the screen is black.	Faulty connections for the visual signal connector or the monitor power connector.	Check the connections for the monitor and game board connectors.
	Broken monitor.	Contact the company from whom the unit was purchased.
Irregular/uneven colors on the monitor screen.	Magnetization to the CRT.	Press the Demagnetization switch on the switch unit. <See Chapter 9.>
Colors on the monitor screen are strange.	Faulty connection for the visual signal connector.	Check the visual signal connector connection and make sure it is secured properly.
	Screen adjustment is not appropriate.	Make adjustment appropriately. <See Chapter 14.>
The on-screen image sways and/or shrinks.	The power source and voltage are no correct.	Make sure that the power supply and voltage are correct.
Does not accept input from any switch or volume.	Faulty connector connections.	Check the connection for the I/O Board and Cabinet connector.
		Check the power for the I/O Board.
Does not accept input from the Shift Lever.	Faulty connector connections.	Check the connections for the connectors in the Control Panel and between the Control Panel and the Cabinet.
	Broken Microswitch.	Replace the Microswitch. <Microswitch 509-5704>
Steering (Servomotor) response is incorrect.	Incomplete power on check.	Power on and verify that the power on check completes properly. <See Section 6-5.>
	Deviation of the volume value.	Adjust the volume value in the Test Mode. <See Chapter 9.>
	Volume gear engagement fault.	Adjust the engagement of the gear. <See Chapter 9, 10.>
	Volume malfunctioning.	Replace the volume. <See Chapter 10.>
	Detached wires.	Check for faulty wire connections around moving parts. When replacing wires, secure them so that they do not touch any moving parts.
No response from Steering (Servomotor).	Failure of power-on checking procedure.	Reconnect the power and complete a power-on checking procedure. <See Section 6-6.>
	Faulty connector connections.	Check the connections for the connectors between the Game Board and Servodriver and between the Servodriver and the Servomotor.
	Thermal element in the Servodriver is operating.	Occurs when the internal temperature reaches 70°C (158°F) and corrects automatically when the unit cools.
	Momentary overload caused a fuse on the Servodriver to blow.	Contact the company from whom the unit was purchased.
Steering (Servomotor) is weak in its force feedback.	Aging of the force feedback mechanism.	Reset in the Test Mode. <See Chapter 9.>

The accelerator or brake does not perform appropriately.	Incorrect volume setting.	Adjust the volume value in the Test Mode. <See Chapter 9.>
	Faulty Volume attachment or adjust gear alignment.	Adjust the volume attachment and verify in Test Mode. <See Chapter 9, 12.>
	Faulty connector connection.	Check the connections for the accelerator and brake connectors and the connectors between the accelerator, brake and cabinet.
	Failure of the volume.	Replace the volume. <See Chapter 12.>
Start button and View Change button input does not work and they do not flash.	Faulty connector connections.	Check the connections for the connectors between the I/O Board, the cabinet and the control panel and those inside the control panel.
Start button and View Change button input works, but they do not flash.	Unverified settings or operation.	The Start button only flashes when Free Play is set. Check the operation in Test Mode. <See Chapter 9.>
	The lamp is burnt out.	Replace the lamp. <See Chapter 15.>
Failure of the network play.	Network play is wrongly set.	Reset correctly. <See Chapter 9, 19.>
	Communication cables are disconnected. Communication cables are wrongly connected.	Reconnect the cables. <See Chapter 19.>
	Damage of communication cables.	Reconnect the cables correctly. Replace the cables. Contact the company from whom the unit was purchased.

Replacing Fuses

⚠ WARNING

- **In case fuse replacements other than those stated in this manual are necessary, contact where you purchased the product from for inquiries regarding this matter.**
- **In order to prevent an electric shock, be sure to turn power off and unplug from the socket outlet before performing work by touching the internal parts of the product.**
- **Be careful so as not to damage wirings. Damaged wiring can cause electric shock and short circuit accidents.**
- **Be sure to use fuses meeting specified rating. Using fuses exceeding the specified rating can cause fire and electric shock accidents.**
- **After eliminating the cause of the blowing of fuse, replace the fuse. Depending on the cause of fuse blowing, continued use with the fuse as is blown can cause generation of heat and fire hazard.**

Fuses are located inside AC line filter and on the top of the connector board inside the cockpit base.
Remove fuse lid on AC line filer to replace fuse inside AC line filter.
Lower the seat and remove the tower bracket and base lid F to replace fuses on the connector board.

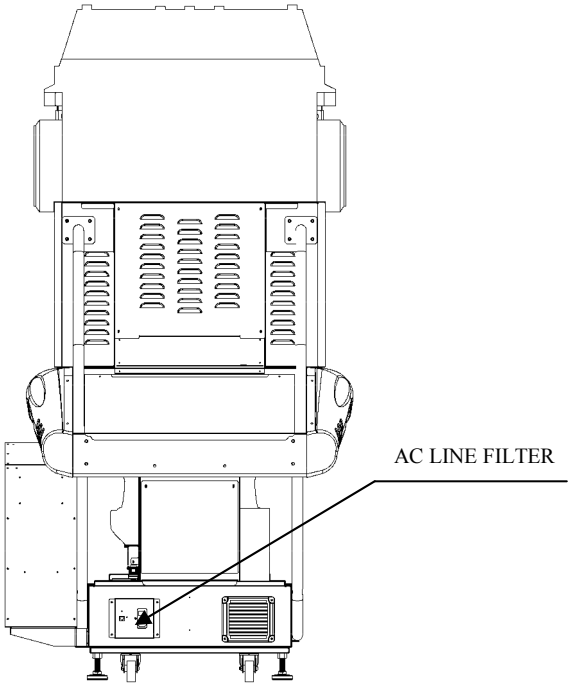

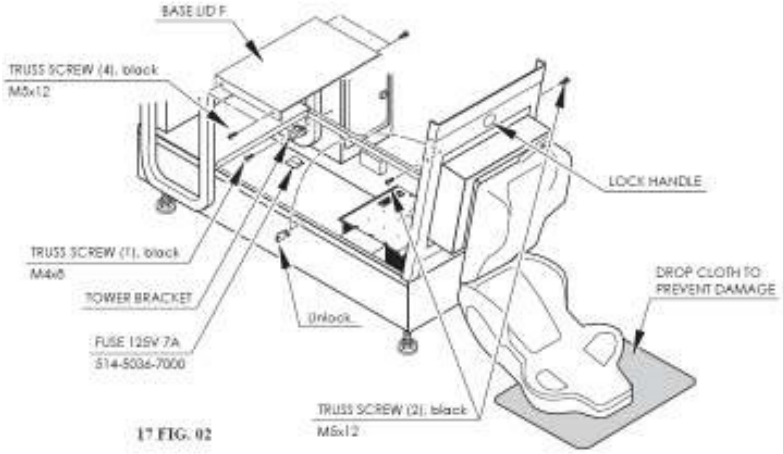

17 FIG. 02

15-2 ERROR MESSAGES

This product displays the following messages when it detects an error. Read the error description and follow the steps indicated. Refer to the LINDBERGH Service Manual for details on error messages displayed with the LINDBERGH logo.

Error 11

JVS I/O board is not connected to main board.

The I/O board and the LINDBERGH have been disconnected.
Check to make sure the I/O board and the LINDBERGH are properly connected.

Error 12

JVS I/O board does not fulfill the game spec.

The number of I/O boards are not sufficient to run the application.
Check to make sure the I/O board and the LINDBERGH are properly connected.

Error 15

Game Program Not Found.

The key chip intended for the application is not connected or is loose.
Check to make sure the key chip and the LINDBERGH are properly connected.

Error 1000

Network is Disconnected.

Communication has been broken.
This occurs when the packet does not arrive in a specific amount of time.
Check to make sure the network devices of all the cabinets are properly connected.
See the NOTE below.

Error 1001

MAIN-Cabinet Not Found.

The main cabinet (CABINET ID 1) was not found when the application was started or a timeout occurred while waiting for communication. Communication will time out after approximately 2 minutes.
- In GAME TEST mode, check to make sure the main cabinet (CABINET ID 1) is properly set up.
- In the case of a time out, turn the power to all the connected cabinets off and then on again.

Error 1002

SUB-Cabinet Not Found.

The sub cabinets (CABINET ID 2-4) were not found when the application was started or a timeout occurred while waiting for communication. Communication will time out after approximately 2 minutes.
- In GAME TEST mode, check to make sure the sub cabinets (CABINET ID 2-4) are properly set up.
- In the case of a time out, turn the power to all the connected cabinets off and then on again.

Error 1003

Same CabinetID Found.

The connected cabinets have the same CABINET ID.
In GAME TEST mode, set the CABINET IDs making sure that they are all different.

Error 1004

Network has not been initialized.

The network has not been initialized.
Check to make sure the network device on the LINDBERGH is functioning properly.

Error 1005

Network cannot use.

The network cannot be used.
Check to make sure the network device on the LINDBERGH is functioning properly.

NOTE: This game is set up so that if one cabinet comes up with the message, "Error 1000 Network is Disconnected," the same message will appear on all the other cabinets as well. To recover the connection, check the network devices connecting the cabinets, and then turn the power off to all the cabinets showing the error and then on again.

16. GAME BOARD

⚠ WARNING

● In order to prevent electric shock and short circuit hazards, be sure to turn power off before performing work.

● Be careful not to damage the wires. Damaged wires may cause electric shock or short circuit or present a fire risk.

● When replacing or repairing the game board and then returning it to the cabinet, be sure to reconnect all the connectors correctly. Improper connection may cause electric shock, short circuit or fire.

●When connecting the connector, check the orientation carefully and connect securely. The connector must be connected in the proper direction. If it is connected in the wrong direction or indiscriminately at an incline so that a load is applied, the connector or its terminal pins could break, causing a short circuit or fire.

● No connectors other than those connected on the game board when first delivered can be used b this product. Do not connect any other wires to any of the unused connections. This may lead to the generation of heat, smoke or burn outs.

⚠ CAUTION

In this product, setting changes are made during the test mode. The game board need not be operated. Use the game board, etc. as is with the same setting made at the time of shipment so as not to cause electric shock and malfunctioning.

16-1 CONTROL BOARDS - LOCATION

⚠ WARNING

• When returning the game board after making repairs or replacements, make sure that there are no errors in the connection of connectors. Erroneous connections can lead to electrical shock, short circuits or fires.

• When connecting a connector, check the direction carefully. Connectors must be connected in only one direction. If indiscriminate loads are applied in making connections, the connector or its terminal fixtures could be damaged, resulting in electrical shock, short circuits or fires.

The machine is fitted with Game Board and several other
Ancilliary Boards which are mainly fitted inside the Machine Cockpit Bases

Only quali fied Personnel should attempt to Service these Units and
before gaining access to the machine, it should be isolated from the mains supply.

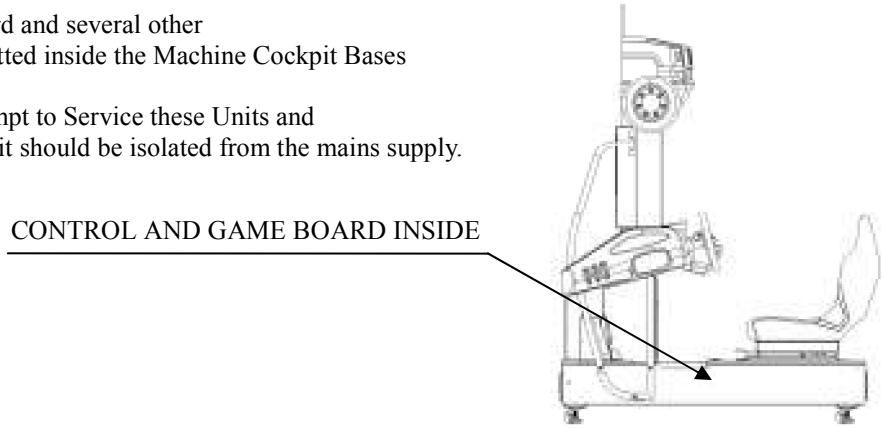

1. The Game board is located under the Player Seat, and to gain access the following procedure should be carried out.
Unlock the Seat Lid and then remove the Security Bolt located on each edge of the Lid.

2. Once released, the Seat Lid may be opened by til ting it backwards.
Due to the weight of the unit, great care should be taken when opening the Seat Lid, if dropped Impact Damage is likely to occur.
Before opening the unit, a protective cushion or padding should be placed on the ground in the approximate position where the seat back will touch the floor.
This is to help prevent the back of the seat from getting scrathed and marked and when opening, the back of the seat should be carefully lowered to the floor, placing it on the protective cushion.

⚠ CAUTION

GREAT CARE SHOULD BE TAKEN WHEN OPENING AND CLOSING THIS UNIT.

LIKELY CHANCE OF MACHINE DAMAGE OR PERSONNEL INJURY IF UNIT IS DROPPED

DURING OPENING, WITH A CHANCE OF FOREIGN BODIES GETTING TRAPPED WHEN CLOSING THE UNIT, CAUSING PERSONNEL INJURY

3. The Control Boards are located under the front floor section of the base.
To gain access, remove the four screws marked 'X' (2 each side of the footplate)

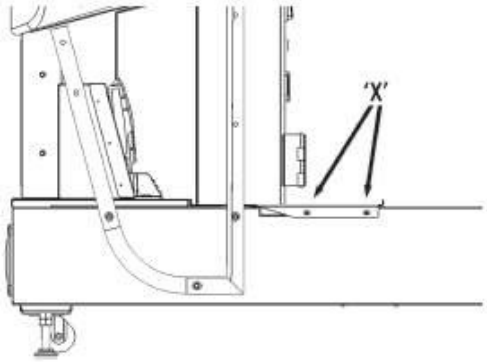

4. When screws have been removed, TILT the footplate in an upwards direction until the LIP on the backside of the footplate is clear of the front section of floor and REMOVE the plate.

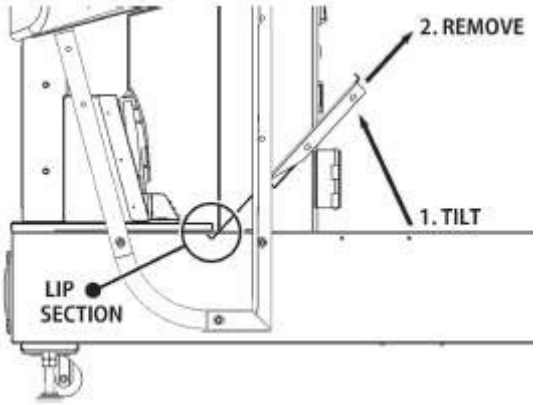

]

5. The Game Unit and Control Boards located inside the Cockpit Base are laid out in the following manner.
When replacing a board, make sure that any connectors being removed should be handled correctly with any location fastener if any being released before disconnecting the connector.
Always disconnect a plug by holding the housing and never tug on the wiring as this may damage the terminations inside the connecter and lead to electrical failure.

16-2 CONTROL BOARDS - IDENTIFICATION

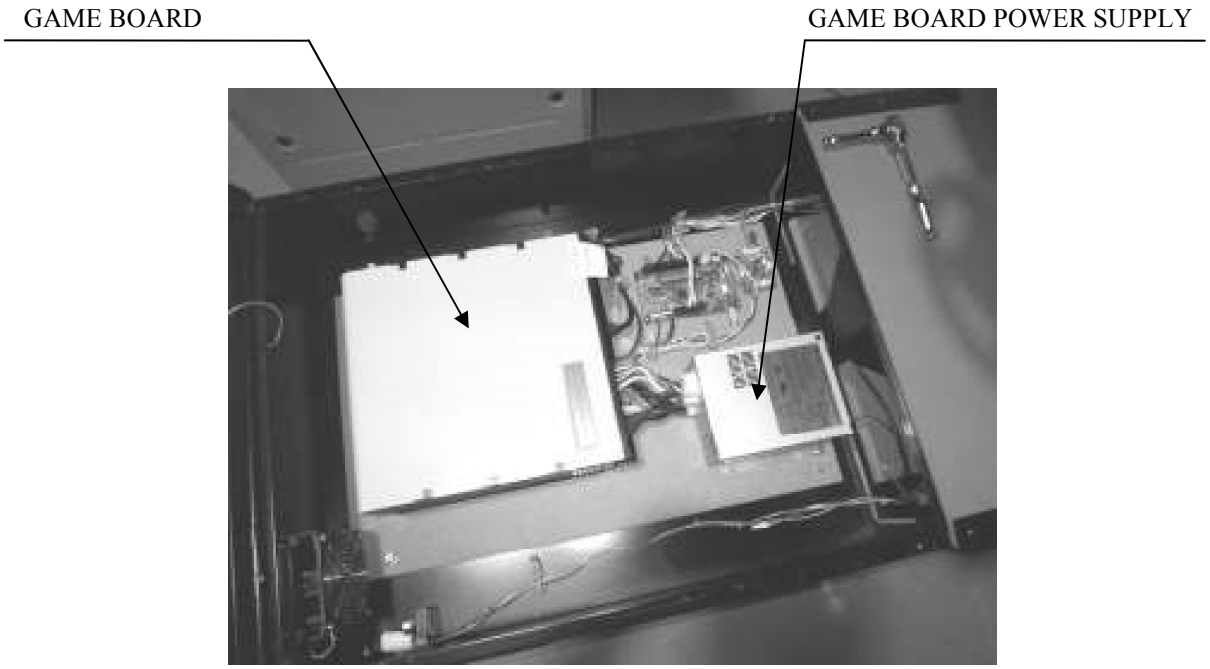

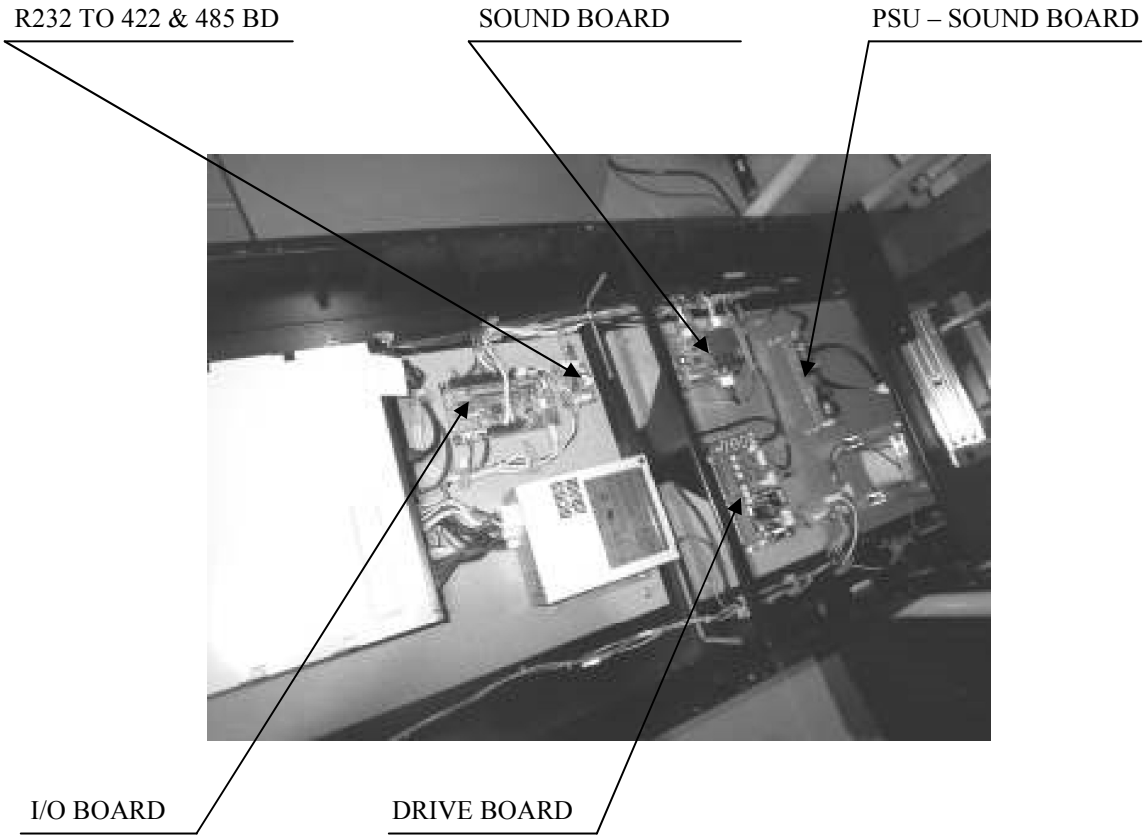

17. COMMUNICATION PLAY

For this game, up to 4 machines can be connected to allow up to 4 players to play simultaneously. In this instance, connecting the communication cable and setting for the communication play are required.

17-1 INSTALLATION PRECAUTIONS

⚠ WARNING

● Before starting to work, ensure that the Power SW is OFF. Failure to observe this can cause electric shock or short circuit.

● Use care so as not to damage wirings. Damaged wiring can cause electric shock or short circuit.

● Do not touch undesignated places. Touching places not designated can cause electric shock or short circuit.

● The work described below should be carried out by the site maintenance personnel or other qualified professional. Work carried out by personnel without the necessary skill or technology can cause accident.

● To perform work safely and avoid serious accident such as the cabinet falling down, do not perform work in places where step-like grade differences, a ditch, or slope exist.

● To prevent accidents while working or while operating the product after it has been installed, be sure not to conduct any procedures other than those given in this manual. There are cases in which procedures not covered in this manual require special tools and skills. If a procedure not given in this manual is required, request service from the office given in this manual or from the point of purchase.

⚠ CAUTION

● To perform work safely, be sure to secure the space corresponding to number of machines to be linked. Failure to observe this can cause accident.

● To avoid accidents, use a cable cover that will not cause patrons to trip when laying network cables in areas of heavy foot traffic.

● To prevent accidents and acts of vandalism, cover the network cables with the strongest cover possible.

Since 2 or more machines are to be linked, sufficient power corresponding to the number of machines used need to be supplied. Note that as a standard, the per machine capacity should be 7 A for the 100-120 V area, and 4 A for the 220-240 V area.

Distance between Machines

The maximum distance between the game machines depends on the length of the cables connecting them, but make sure the units are separated from each other by at least 70 cm (27.6 in) so that players can pass between them. Do not install more than the designated number shown in the layout diagram.

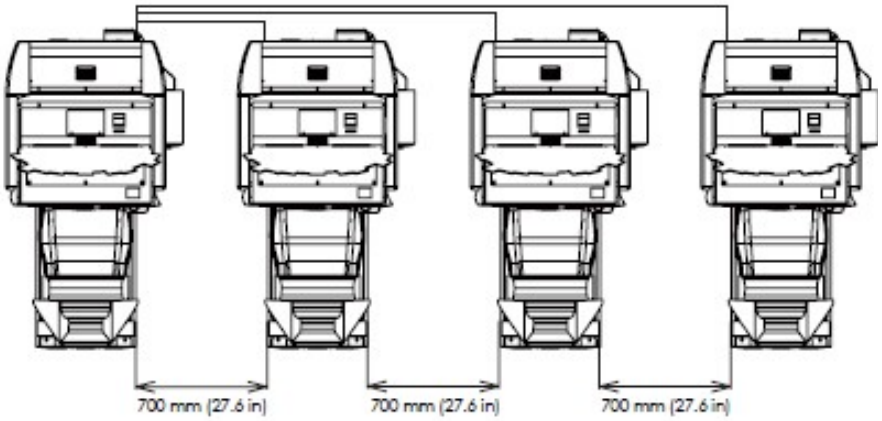

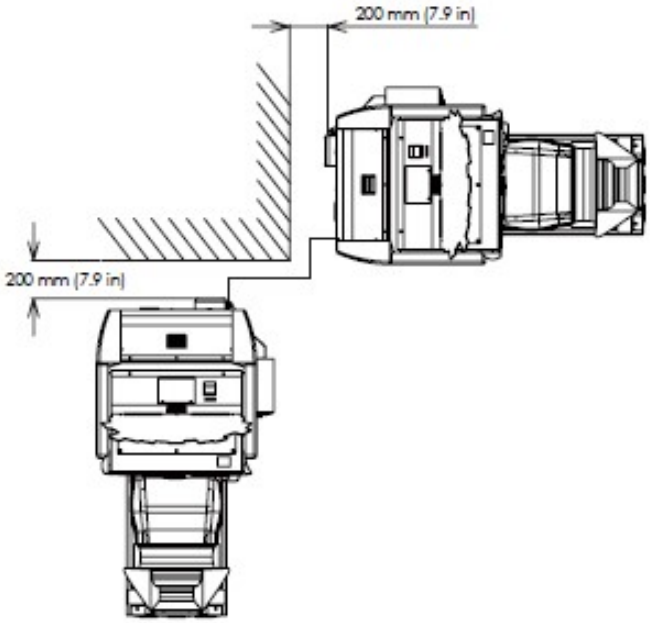

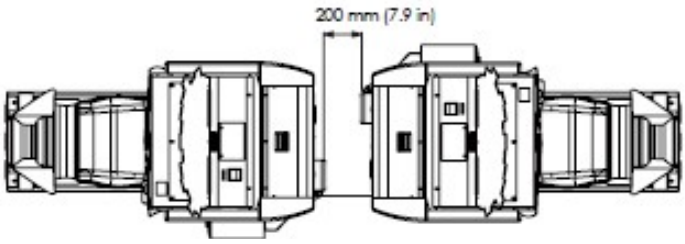

17-2 CONNECTING THE COMMUNICATION CABLE

This game can be linked up to 4 units.

(For 2 units link play)
The LAN port on the game board in each unit must be connected with network (LAN) cable through LAN port on AC unit.

(For 3 or more units link play)
The hub is necessary to enable 3 or more units link play, but it is not included in the unit.
It must be prepared separately.
It is available at SEGA as an optional HUB KIT (part#: XKT-1848).

1. Fit the HUB on the back of one of the cabinets as shown in the right figure, and plug the power cable to the connector inside the cabinet.(3P connector)

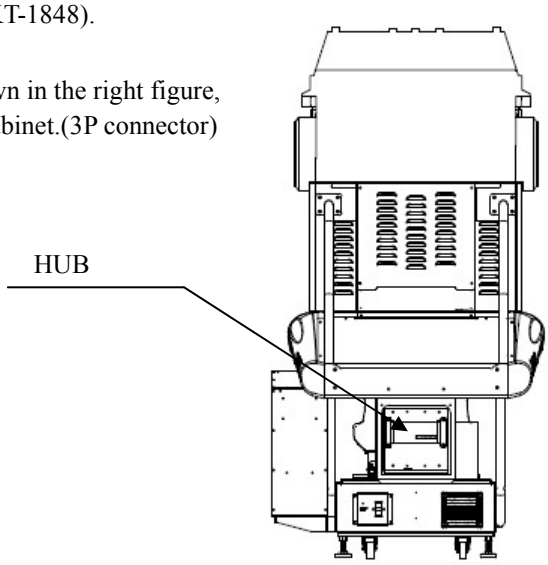

2. Connect the LAN port on the game board in each unit to LAN port on the HUB with network (LAN) cable.

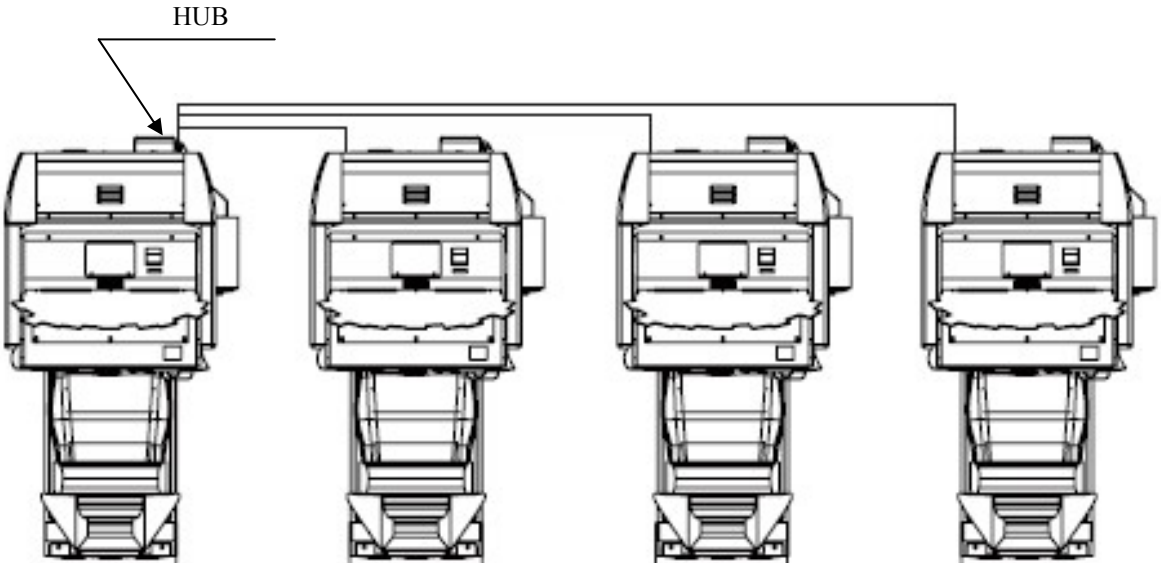

17-3 NETWORK PLAY SETTINGS

Each of the linked machines must be set up for network play. If the machines are not set up correctly, network play will not be possible.
For this game, up to 4 machines can be connected to allow up to 4 players to play simultaneously.

1. Turn on the power on each machine to be used in network play.

2. Cause all of the machines to enter the Test Mode.

3. Select the GAME TEST MODE and press the Test button to display the GAME TEST MENU screen.

4. Select the GAME ASSIGNMENTS in the GAME TEST MENU screen and press the Test button.

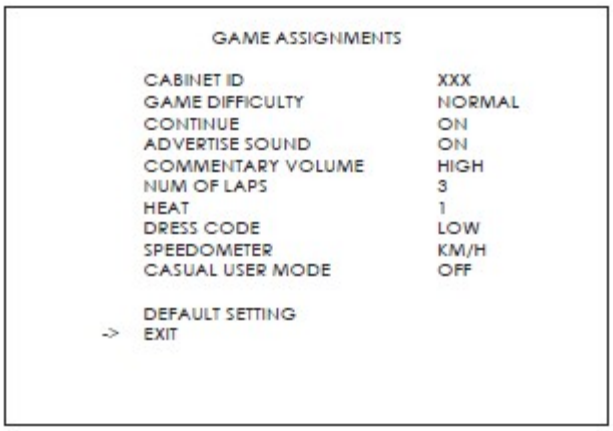

19-3 FIG01 GAME ASSIGNMENTS Screen

5. Perform the CABINET ID setting. Set the different ID number to each machine. Be sure to assign one of them with the ID number of “1.”

6. Cause all of the machines to exit from the TEST MODE. Always select EXIT in the SYSTEM TEST MENU screen.

17-4 NETWORK PLAY PRECAUTIONS

(STOP) IMPORTANT

● In network play, difficulty level and other settings are made from CABINET ID Number 1. Changing the settings at CABINET ID Number 1 also changes the settings for other units.

● If one of the units attached for network play enters Test Mode, the other unit will display the Error screen.

● Even when units are connected for network play, each seat, each game may be given different cost settings. Incorrect cost settings may cause budget balancing problems.

The operation of a unit when connected to other units for network play is different than that of a stand-alone unit. Administration of network units should be handled carefully.
Entering Test Mode will cause any other machines set up for network play to display the Error screen. When customers are playing the game, do not enter Test Mode on any network play-enabled machine.

18. DESIGN-RELATED PARTS

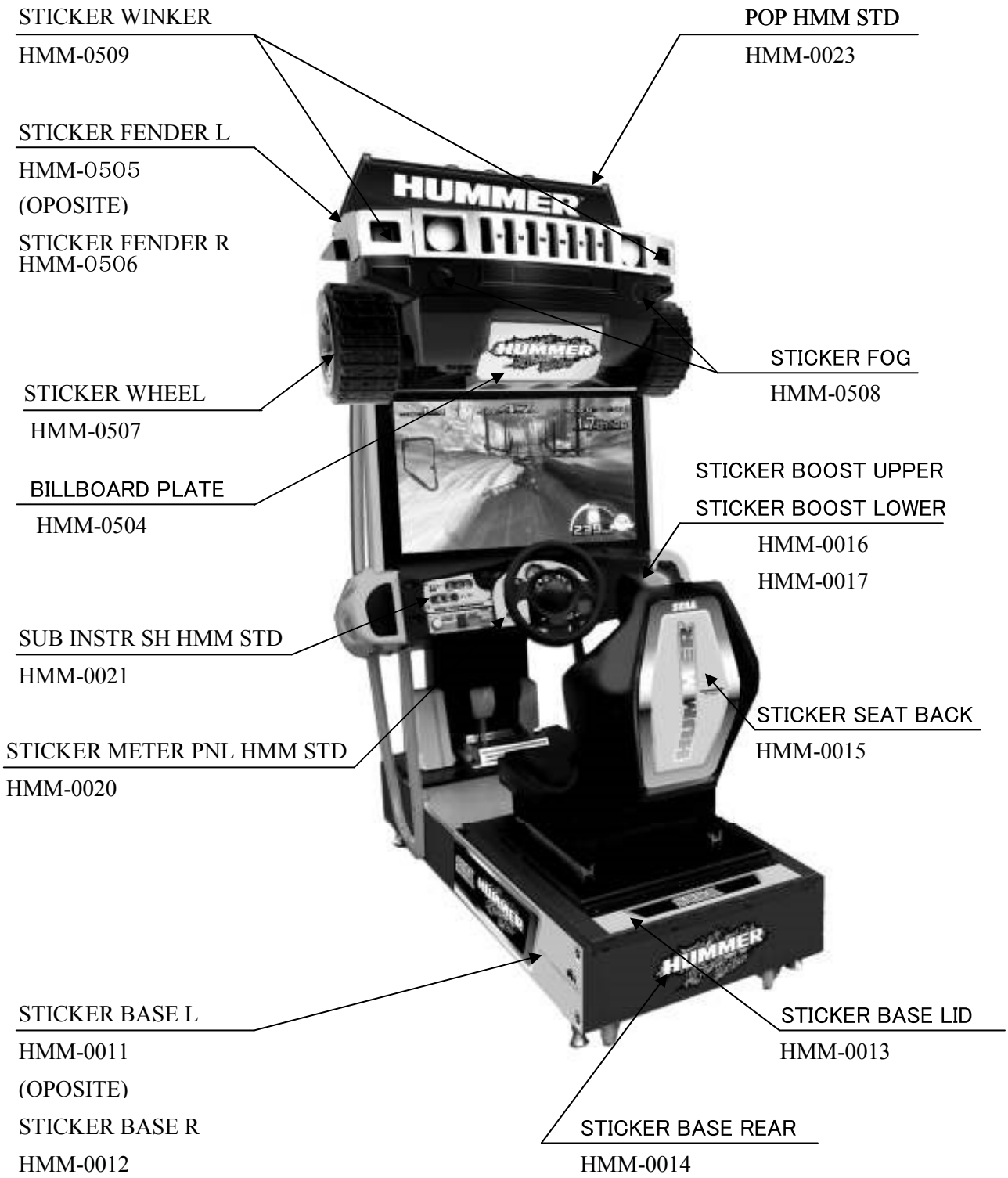

19. PARTS LIST

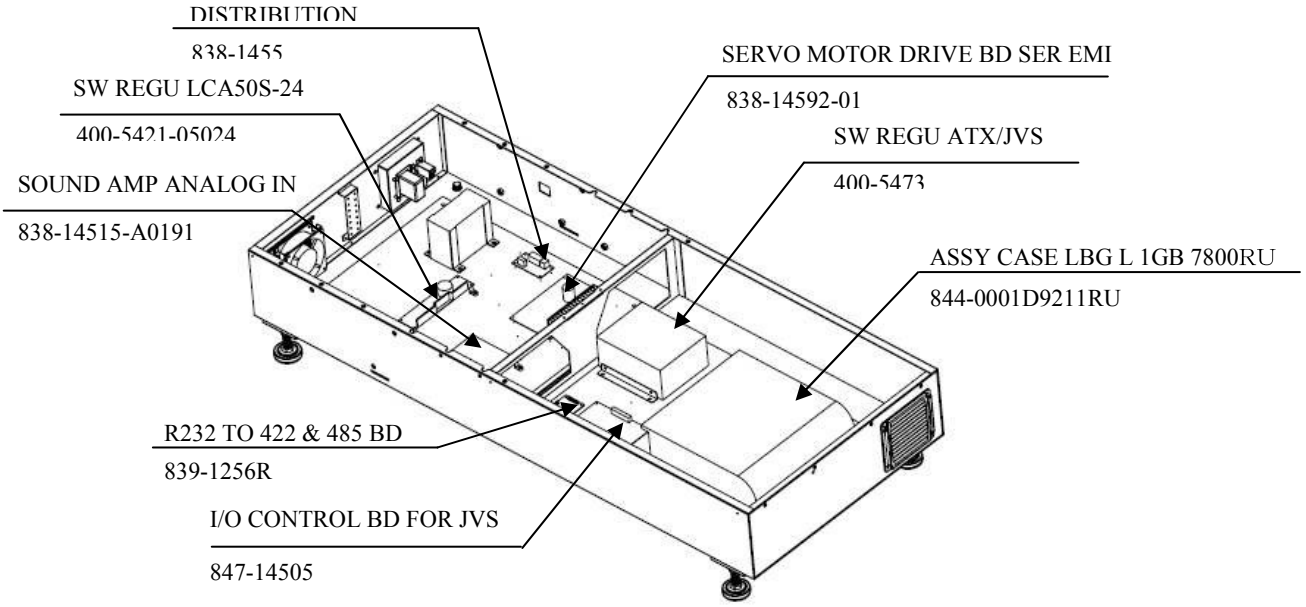

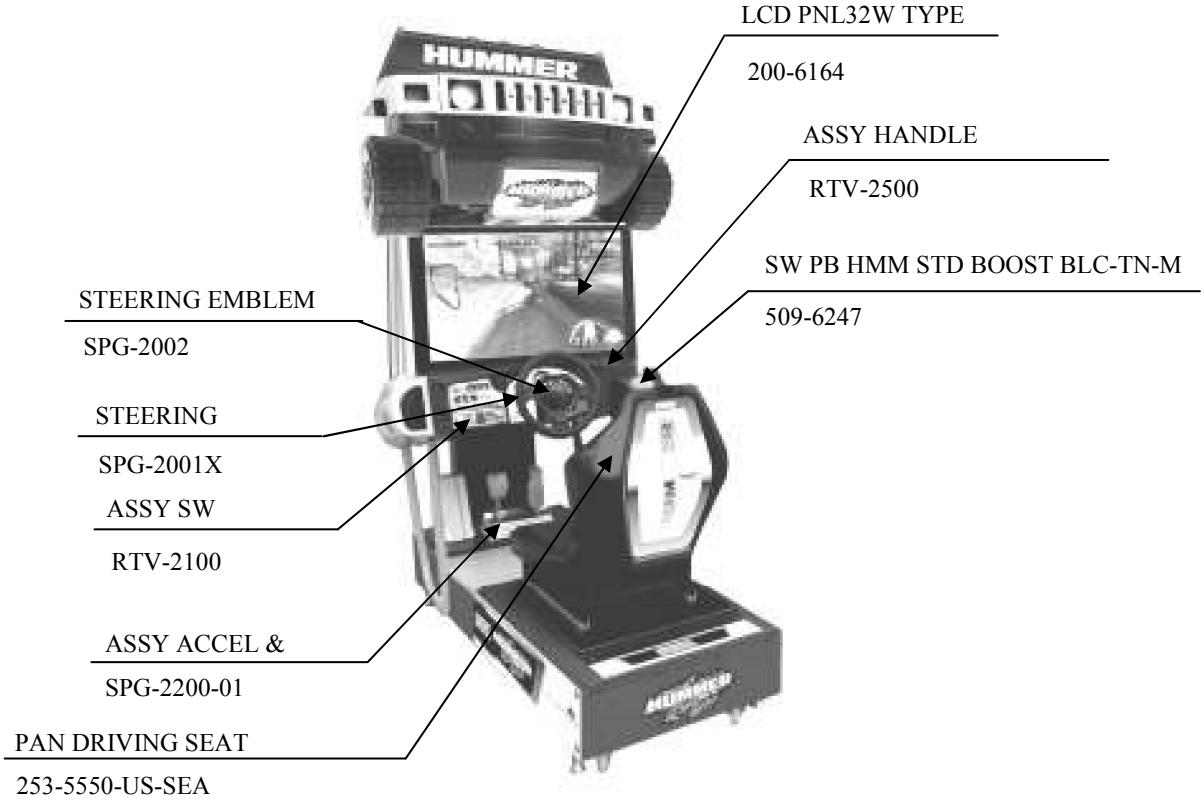

ASSY ACCEL&BRAKE (SPG-2200-01)

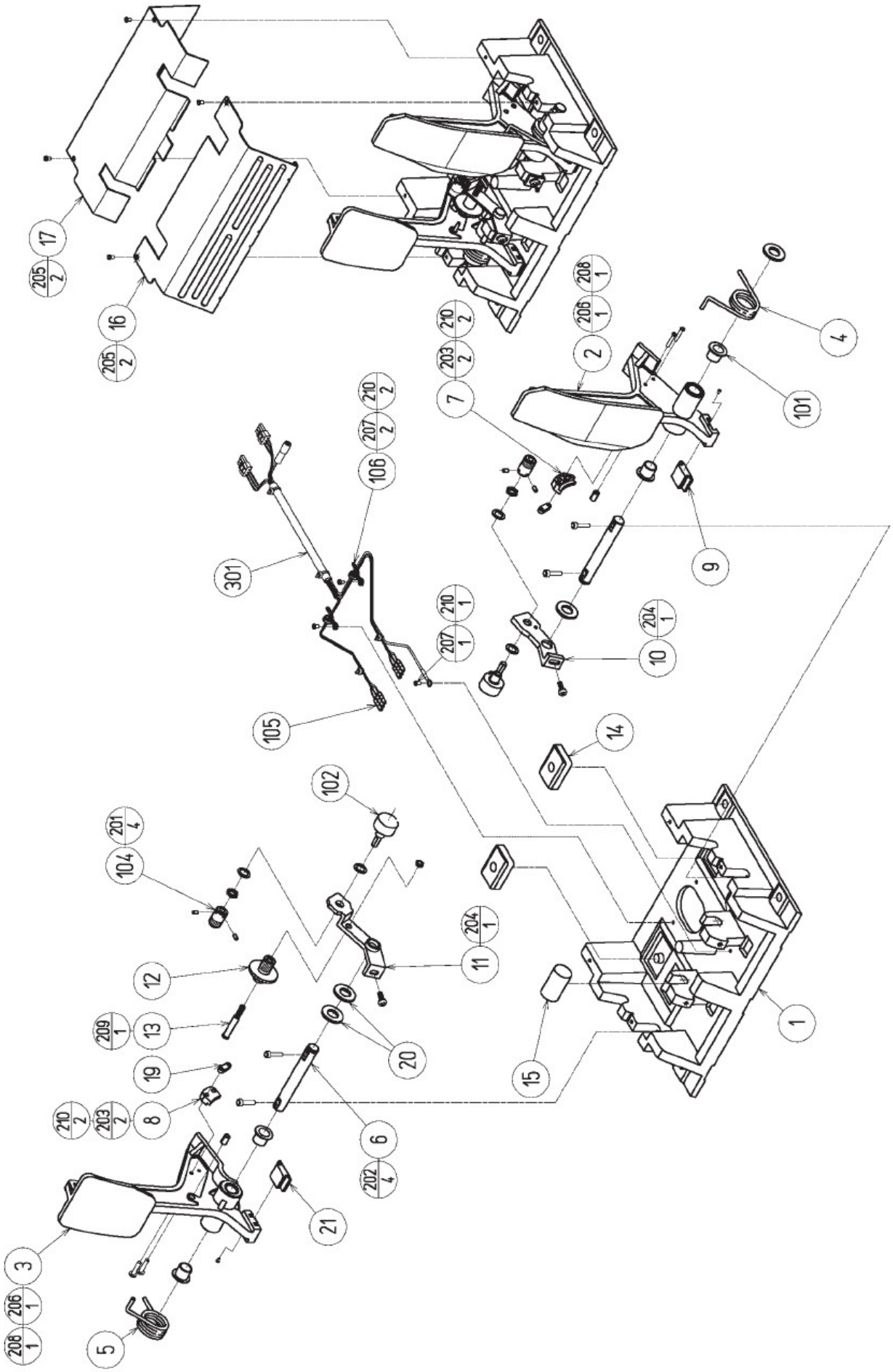

ASSY ACCEL&BRAKE (SPG-2200-01)

ITEM NO.	PART NO.	DESCRIPTION	NOTE
1	SPG-2201	BASE	
2	SPG-2202	ACCEL PEDAL	
3	SPG-2203	BRAKE PEDAL	
4	SPG-2204	ACCEL SPRING	
5	SPG-2205	BRAKE SPRING	
6	SPG-2206	SHAFT	
7	SPG-2207	ACCEL GEAR	
8	SPG-2208	BRAKE GEAR	
9	SPG-2209	NEUTRAL STOPPER	
10	SPG-2210	VR PLATE ACCEL	
11	SPG-2211	VR PLATE BRAKE	
12	SPG-2212	AMPL GEAR	
13	SPG-2213X	GEAR SHAFT	
14	SPG-2214	STOPPER	
15	SPG-2215	RUBBER CUSHION	
16	SPG-2216	COVER	
17	SPG-2217	VR COVER	
19	SPG-2219	GEAR STAY	
20	SPG-2220	WSHR	
21	SPG-2221	NEUTRAL STOPPER D	
101	100-5263	BEARING 12(OILES 80F-1212)	
102	220-5484	VOL CONT B-5K OHM	
102	220-5753	VOL CONT B-5K OHM (TOCOS)	
104	601-7944	GEAR 15	
105	310-5029-F15	SUMITUBE F F15MM	
106	280-0419	HARNESS LUG	
201	028-A00304-P	SET SCR HEX SKT CUP P M3x4	
202	020-000520-0Z	HEX SKT H CAP SCR BLK M5x20	
203	000-P00420	M SCR PH M4x20	
204	000-P00512-W	M SCR PH W/FS M5x12	
205	000-T00408-0C	M SCR TH CRM M4x8	
206	FAS-450005	SPR PIN BLK OZ 6x10	
207	000-P00405	M SCR PH M4x5	
208	FAS-000001	M SCR TH CRM M3x6	
209	050-H00500	HEX NUT M5	
210	060-F00400	FLT WSHR M4	
301	600-6840-01	WIRE HARN ACCEL&BRAKE YL	

ASSY SW PLATE

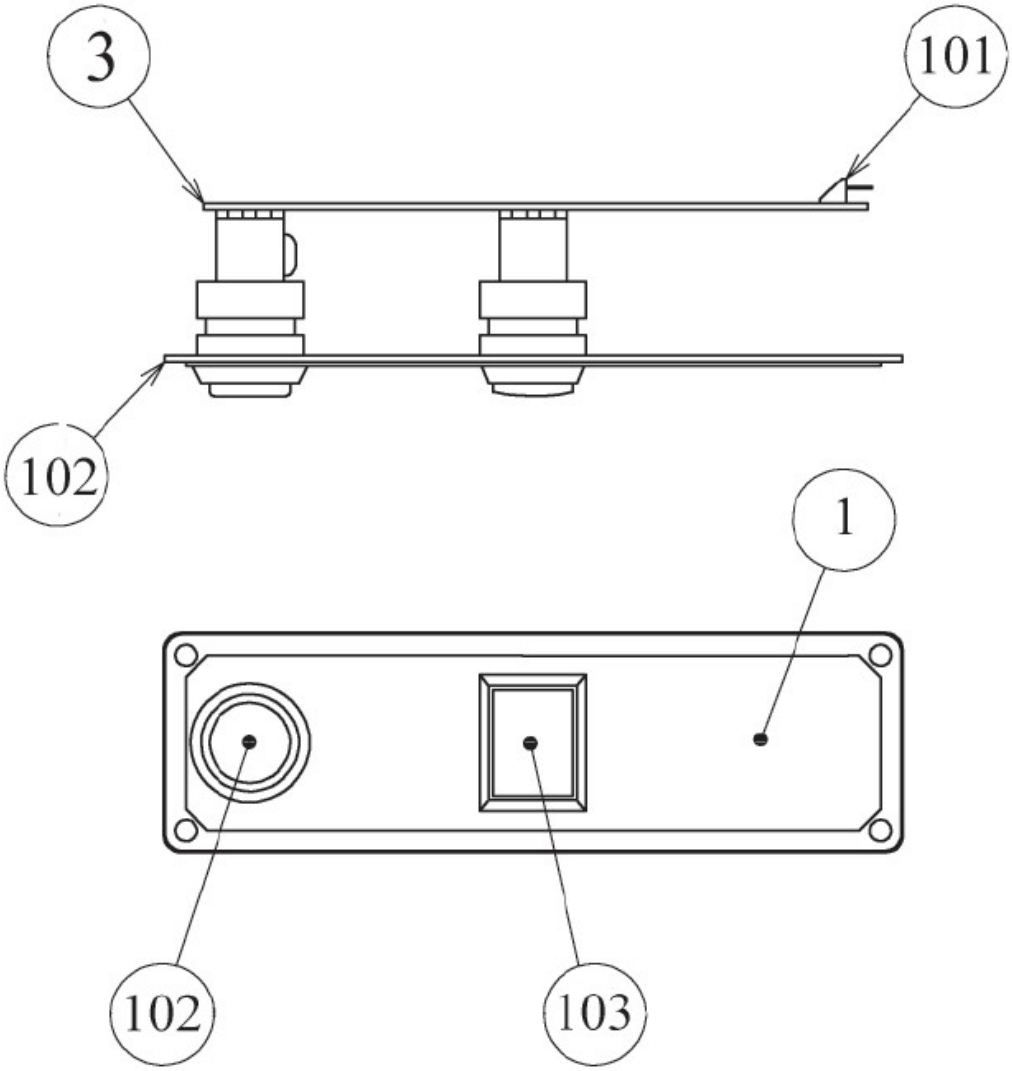

NOTE: When attaching the STICKER, line it up with the hole.

ITEM NO.	PART NO.	DESCRIPTION	NOTE
1	RTV-2101	STICKER START/VIEW	
2	ORT-2101	BUTTON PLATE	
3	171-6478B	PC BD LIGHTING SWX5	
101	212-5205-12	CONN JST M 12P RTA	
102	509-5560-Y-91	PB SW W/L 6V 1L Y ROHS	
103	509-5561-R-91	PB SW W/L 6V 5L R ROHS	

ASSY HANDLE MECHA (RTV-2500) (D-1/2)

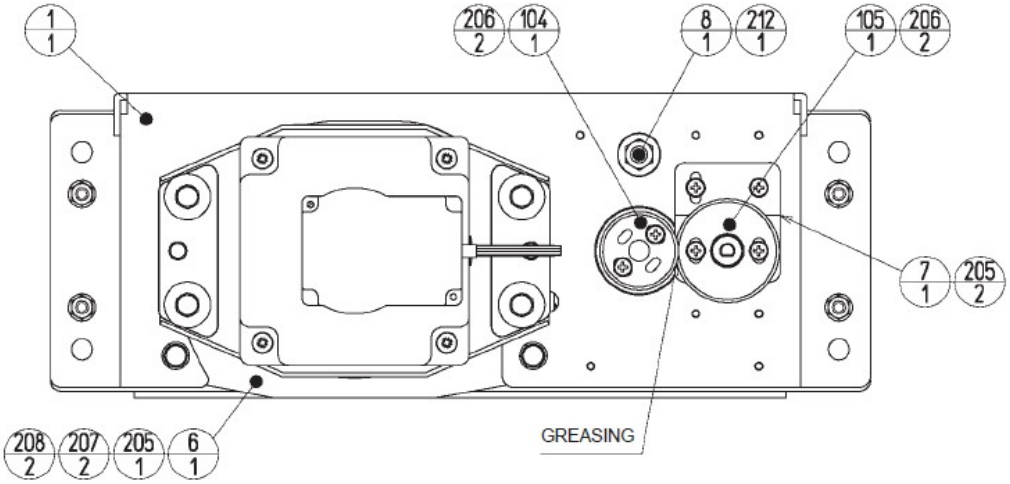

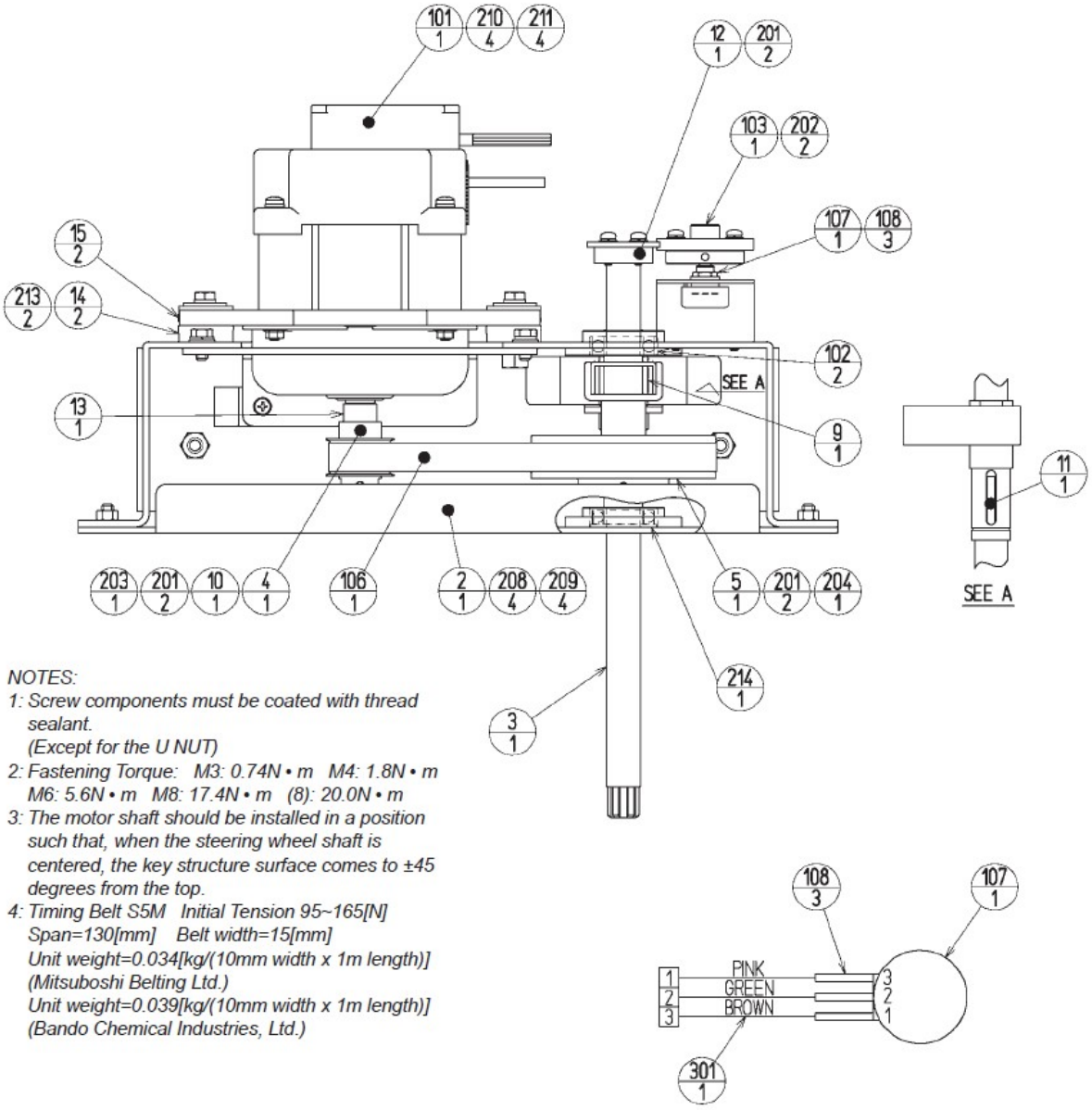

NOTES:

1: Screw components must be coated with thread sealant.
(Except for the U NUT)

2: Fastening Torque: M3: 0.74N • m M4: 1.8N • m M6: 5.6N • m M8: 17.4N • m (8): 20.0N • m

3: The motor shaft should be installed in a position such that, when the steering wheel shaft is centered, the key structure surface comes to ±45 degrees from the top.

4: Timing Belt S5M Initial Tension 95~165[N]
Span=130[mm] Belt width=15[mm]
Unit weight=0.034[kg/(10mm width x 1m length)]
(Mitsuboshi Belting Ltd.)
Unit weight=0.039[kg/(10mm width x 1m length)]
(Bando Chemical Industries, Ltd.)

ASSY HANDLE MECHA (RTV-2500) (D-2/2)

ITEM NO.	PART NO.	DESCRIPTION	NOTE
1	ORA-2501	HANDLE BASE	
2	SPG-2502	BASE LID	
3	ORA-2502	HANDLE SHAFT	
4	SPG-2504	PULLEY 20 S5M	
5	SPG-2505	PULLEY 60 S5M	
6	ORA-2503	MOTOR BRKT	
7	ORA-2504	VR BRKT	
8	ORA-2505	STOPPER BOLT	
9	ORA-2506	STOPPER RUBBER	
10	SPG-2453	KEY 4x4x40	
11	DYN-1270	STOPPER KEY	
12	SLC-1130	ADJUST RING	
13	ORA-2507	MOTOR SHAFT COLLAR	
14	253-5592	MOTOR INSULATOR A	
15	253-5593	MOTOR INSULATOR B	
101	350-5805-02	SERVO MOTOR W/FG SIDE TYPE	
102	100-5112	BEARING 17 (NSK 6003ZZ)	
103	601-8966	GEAR HOLDER	
104	601-6172	GEAR 48	
105	601-6959	GEAR 64	
106	601-9173	TIMING BELT (150 S5M 475)	
107	220-5484	VOL CONT B-5K OHM	
107	220-5753	VOL CONT B-5K OHM (TOCOS)	
108	310-5029-F20	SUMITUBE F F 20MM	
201	028-A00408-P	SET SCR HEX SKT CUP P M4x8	
202	028-A00308-P	SET SCR HEX SKT CUP P M3x8	
203	065-S012S0-Z	STP RING BLK OZ S12	
204	065-S020S0-Z	STP RING BLK OZ S20	
205	000-P00408-W	M SCR PH W/FS M4x8	
206	000-P00412-W	M SCR PH W/FS M4x12	
207	030-000612-S	HEX BLT W/S M6x12	
208	060-F00600	FLT WSHR M6	
209	050-U00600	U NUT M6	
210	030-000840-S	HEX BLT W/S M8x40	
211	068-852216	FLT WSHR 8.5-22x1.6	
212	060-S01200	SPR WSHR M12	
213	012-P00412	TAP SCR #2 PH 4x12	
214	FAS-650023	WAVE WSHR 26.4-34.2x0.3	
301	600-6866-01	WIRE HARN ASSY HANDLE MECHA VR	

ASSY BILLBOARD HUMMER STD

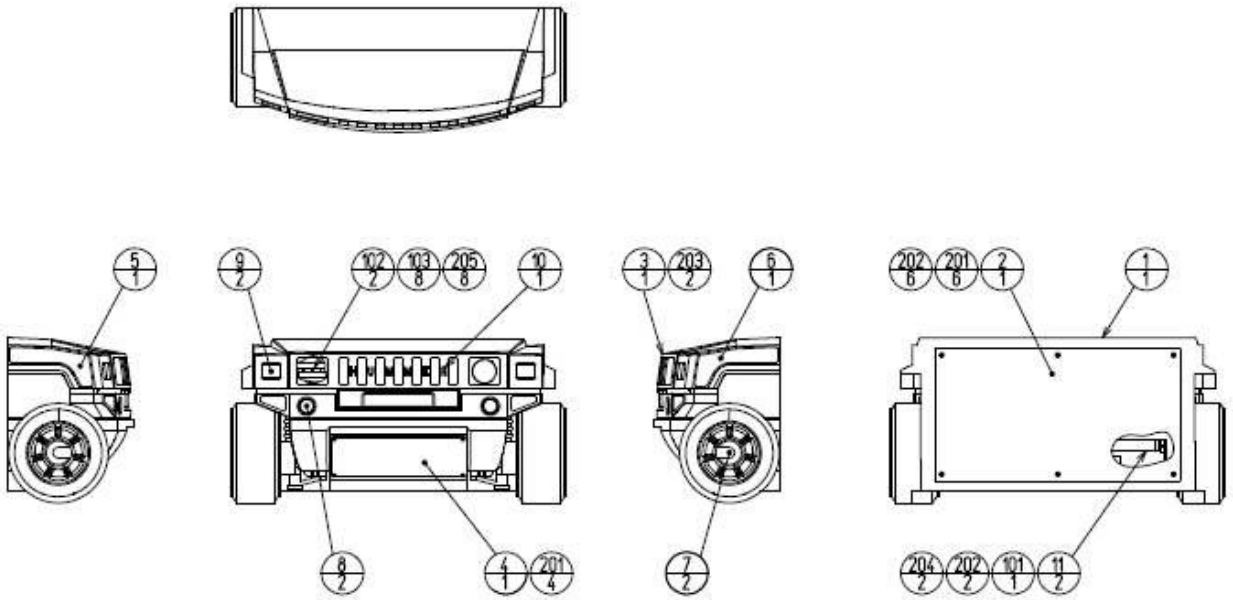

ITEM NO	PART NO	DESCRIPTION	NOTE
1	HMM-0501	BILLBOARD BODY STD	
2	HMM-0502	BACK LID	
3	HMM-0503	GRILL	
4	HMM-0504	BILLBOARD PLATE	
5	HMM-0505	STICLER FENDER L	
6	HMM-0506	STICKER FENDER R	
7	HMM-0507	STICKER WHEEL	
8	HMM-0508	STICKER FOG LAMP	
9	HMM-0509	STICKER WINKER	
10	HMM-0510	STICKER HUMMER LOGO	
101	390-7002	ASSY FL HMM STD T5 (LS-08-14)	
102	838-14972-02	LED BD WHITE 3X2BLOCK	
103	280-5185-5	SPACER TUBE L=5	
201	000-T00416-0B	M SCR TH BLKM4X16	
202	068-441616-0B	FLT WSHR BLK 4.4-16X1.6	
203	011-F00412	TAP SCR FH 4X12	
204	000-P00430-SB	M SCR PH W/S BLK M4X30	
205	FAS-000126	M SCR PH POLYCARBONATE M3X12	
301	HMM-61001	WH BILLBOARD LED	

20. WIRE COLOR CODE TABLE

⚠ WARNING

The DC power wire color for this product is different from previous SEGA titles.
Working from the previous wire colors will create a high risk of fi re.

The color codes for the wires used in the diagrams in the following chapter are as follows.

A PINK
B SKY BLUE
C BROWN
D PURPLE
E LIGHT GREEN

Wires other than those of any of the above 5 single colors will be displayed by 2 alphanumeric characters.

1 RED
2 BLUE
3 YELLOW
4 GREEN
5 WHITE
7 ORANGE
8 BLACK
9 GRAY

If the right-hand side numeral of the code is 0, then the wire will be of a single color shown by the left-hand side numeral (see the above).
Note 1: If the right-hand side numeral is not 0, that particular wire has a spiral color code. The left-hand side character shows the base color and the right-hand side one, the spiral color.

If the right-hand side numeral of the code is 0, then the wire will be of a single color shown by the left-hand side numeral (see the above).

Note 1: If the right-hand side numeral is not 0, that particular wire has a spiral color code. The left-hand side character shows the base color and the right-hand side one, the spiral color.

<Example> 51.....WHITE/RED

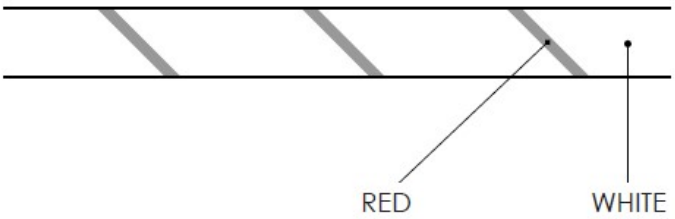

Note 2: The character following the wire color code indicates the size of the wire.

U: AWG16
K: AWG18
L: AWG20
None: AWG22

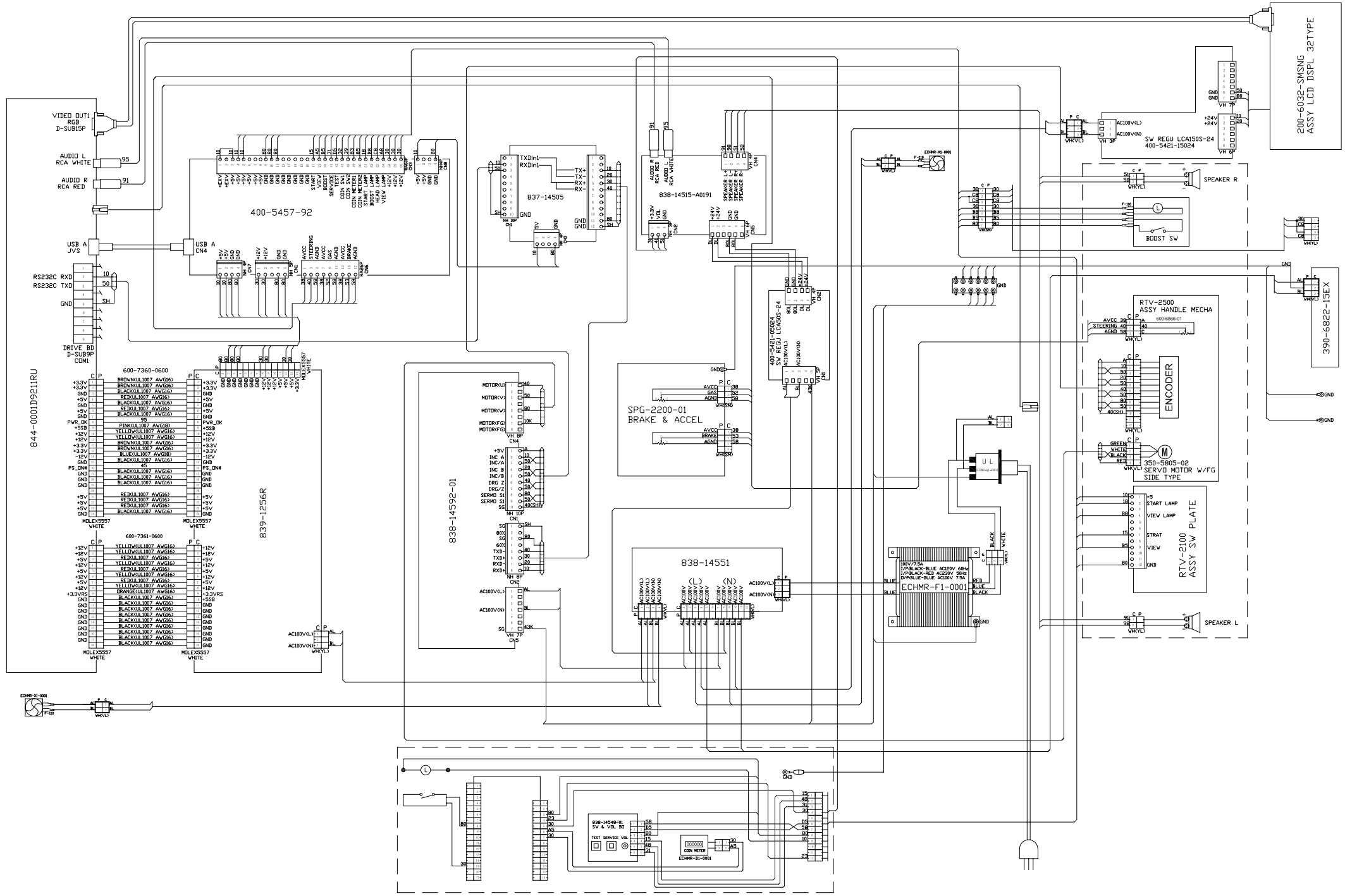

8	BLACK	2	BLUE	B	SKY BLUE	K	AWG18 UL1015	制图 DRAWN	设计 DESIGN	审核 CHECK	日期 DATE
7	ORANGE	1	RED	A	PINK	L	AWG20 UL1007	周斌			09.11.14
5	WHITE	E	LIGHT GREEN	9	GREY		AWG22 UL1007			SIZE:A3	
4	GREEN	D	PURPLE	43	EARTH WIRE	T	AWG24 UL1007				
3	YELLOW	C	BROWN	U	AWG16 UL1015						

WECHE 微勤电机五金厂
WEE CHIN ELECTRIC MACHINERY CO.,LTD.

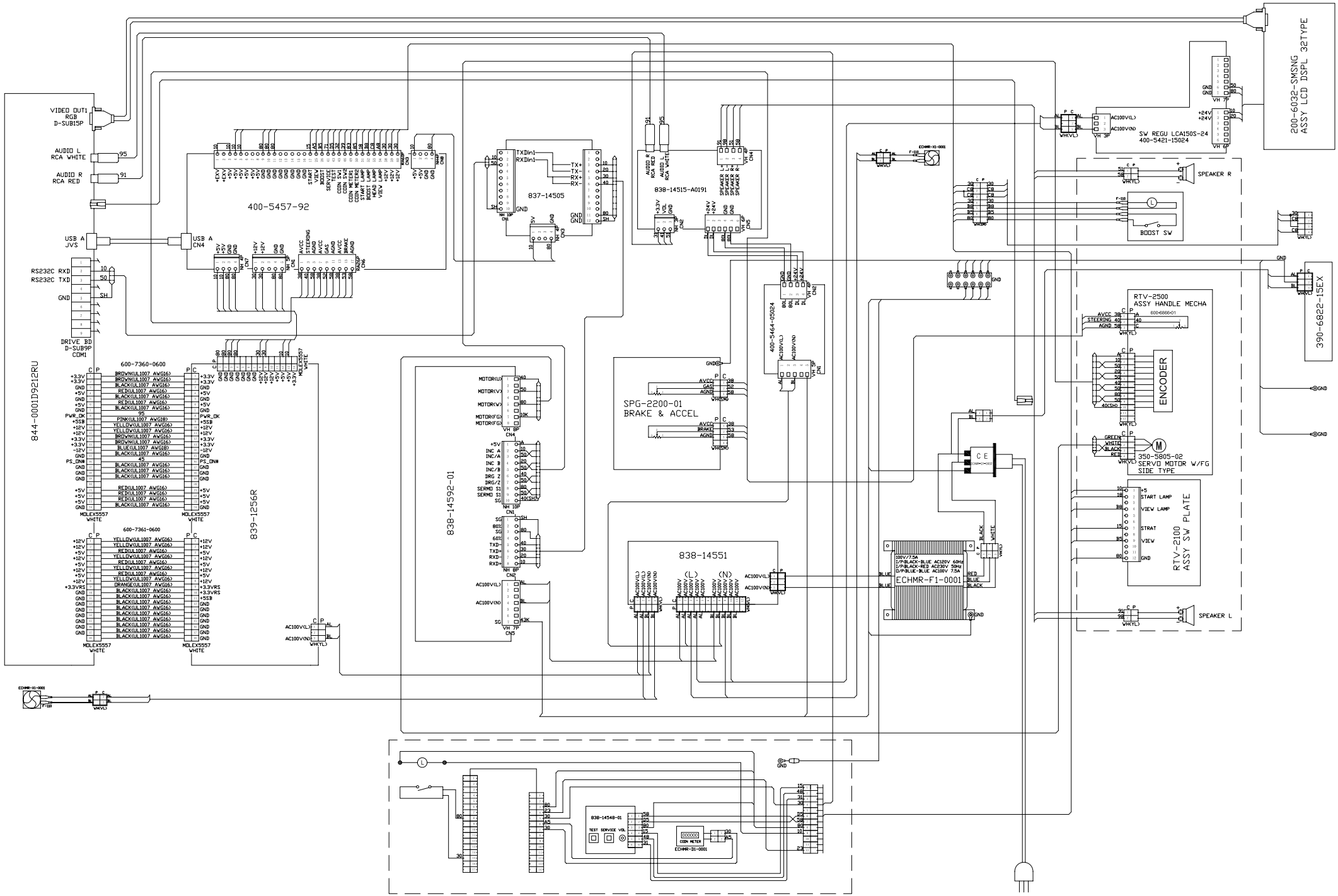

8	BLACK	2	BLUE	B	SKY BLUE	K	AWG18 UL1015	制图 DRAWN	设计 DESIGN	审核 CHECK	日期 DATE
7	ORANGE	1	RED	A	PINK	L	AWG20 UL1007	周斌			09.11.14
5	WHITE	E	LIGHT GREEN	9	GREY		AWG22 UL1007			SIZE:A3	
4	GREEN	D	PURPLE	43	EARTH WIRE	T	AWG24 UL1007				
3	YELLOW	C	BROWN	U	AWG16 UL1015						

WECHE 微勤电机五金厂
WEE CHIN ELECTRIC MACHINERY CO.,LTD.