Kid racing Instruction

⚠ Warning

Before using the machine, please read carefully this Instruction.

Content

Content 1
一、Machine specifications and technical parameters..... 2
二、Spare parts with machine list 3
三、Instructions of moving,transportation and placement..... 4
3-1 Moving method 4
3-2 Fixed machine method 5
3-3 DO not use the machine in this place 5
3-4 Placement place 5
3-5 Placement range and size 6
3-6 Pay attention before turn on the machine 6
四、Wiring and the attention item 7-8
五、set up and maintain 9-10
六、Fault analysis and solution..... 12
七、Game Instruction 12
7-1 How to play..... 12
7-2 Operation interface 12
7-3 Control signal and Instruction 13
7-4 Use and maintenance instructions..... 14
八、Detail of spare parts 17
8-1Instruction part..... 17-16
8-2 Inset coin spare parts 17
8-3 Ticket Dispenser Instruction 18
8-4 Speaker parts 19
8-5 Insurance tube and power module 19
8-6 Electrical installation component 20
8-7 Art section..... 23-22
8-8 Electronic parts..... 23-26
九、IO table..... 25

一、Machine specifications and technical parameters

Unit：mm

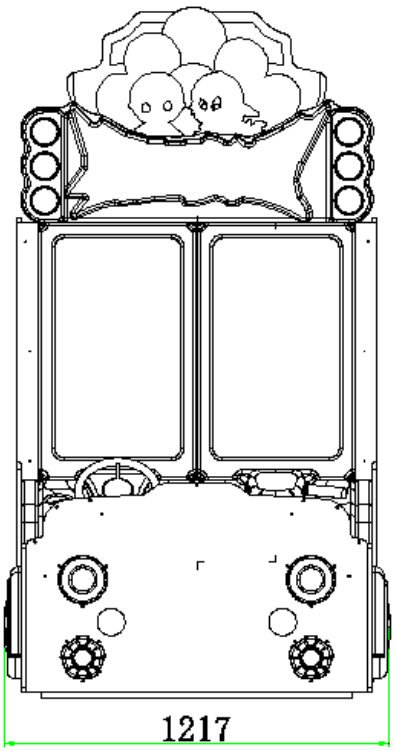

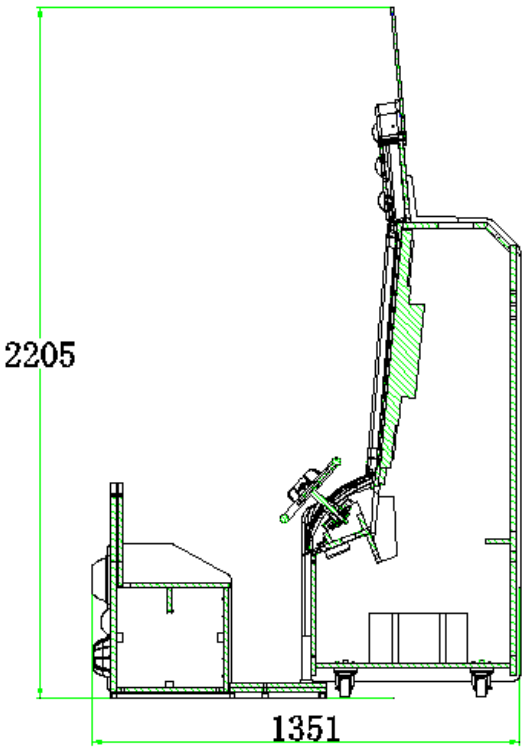

1) Working voltage： 220V or 110V

(note：Actual voltage please check the machine plate)

2) consumed power：mix 150～max 300W

3) Out look size：L1217×W1351×H2205（mm）

4) Weight ：almost 140.9 kg

5) Environmental conditions：Temperature(indoor): -10℃～+40℃；

Humidity：≤90%； Pressure ：86Pa～106Pa

⚠ Warning：After turn off the machine, turn on the machine after 1 min please.

⚠ Warning：Our product keep on improving, the content maybe will update but will not notice, please understand.

Warning：Picture in this book if have any different, Please take the machine tool as the standard.

二、Spare parts list with machine

For you to use this machine, please open the packing box, carefully check the following items are complete.

Parts list is as follows：

NO.	Name	specifications/ material	Quantity	Unit	picture	remarks
1	Instruction	A4	1	本		As customer request
2	Key	AH57	1	个		Ticket dispenser door, coin box door, maintain door
		AH78	1	个		Coin box door
3	Insurance tube	6.3A	1	个		
4	Wiring	1.8M	1	条		As customer request
5	Button switch	SENSOR	1	件		Start button switch
6	Wheel sensor		1	个		Left and right button switch

Before open the package to check all the accessories are to the Qi, if there is a lack of contact with the dealer to check.

⚠ Remark：Our product keep on improving, the content maybe will update but will not notice, please understand.

Note: 1 this machine all wearing parts such as man-made damage is no longer guarantee period of the warranty!

2. The specified warranty parts date: the machine all motor warranty for six months. Coin / ticket machine warranty for 3 months. Machine display self disassembly and maintenance have no warranty!

三、Instructions of moving, ransportation and placement

3-1 Moving method

Below the machine equipped with casters, short distance moving machine, adjust the anchor seat increased for casters contact ground to promote the machine can be. Foot against a ground fault code objects have overturned the risk, so along the ground to promote, anchor the maximum upward, and pay attention to the forward road in the direction of the obstacle and the level of inequality in place.

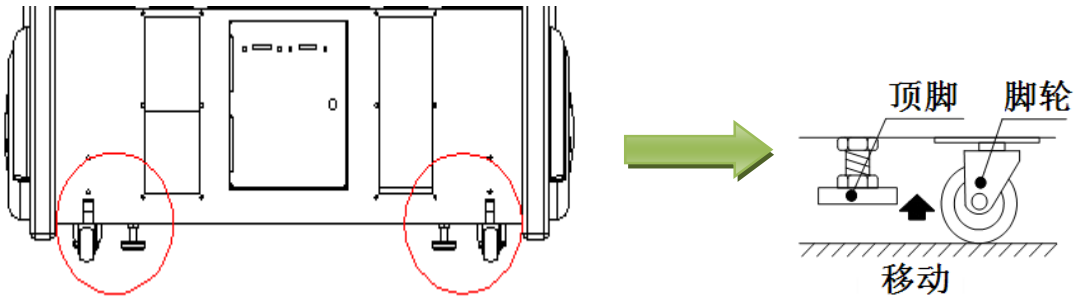

The machine moves in close to the anchor seat adjustment to increase contact to the ground machine can promote the casters.

In the moving machine, after a non smooth or a step position, in order to ensure the safety of the need to have 4 or more people to move the machine.

Please unplug the power plug, in case of accident and adult.

Please pay attention not to damage the power cord, to prevent accidents and accidents.

Please send the maximum anchor to increase and then move to, to prevent accidents and faults

3-2 Fixed machine method

- please put in the flat and not easy to slide on the ground;
- Please use the following anchor machine - fixed the machine (as shown below)

① The lock nut with the wrench loosen anchor, anchor bolt, let casters from the ground about 5mm.

② It will lock the nut clockwise to tighten, fixed good.

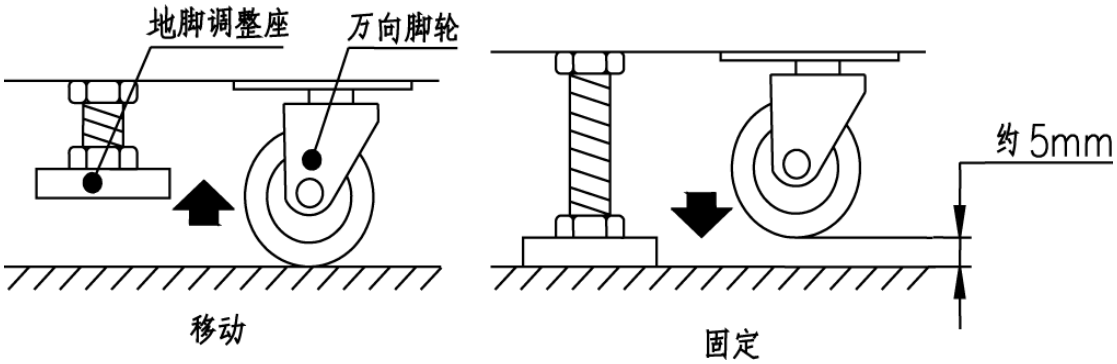

3-3 DO not use the machine in this place

- The machine will produce condensate water or humidity where condensation;
- A place near hot objects;
- A place be close to the place of dangerous goods;
- A smooth or uneven in places;
- In the place near vicinity of the equipment is easy to produce sparks;；
- The place where the vibration is severe;
- In the dusty environment.

3-4 Placement place

⚠ Warning: This machine is suitable for indoor use, not suitable for outdoor use.

⚠ Warning: do not uses forklift truck to move the machine, this

behavior may cause the machine damage.

3-5 Placement range and size

The machine should be placed in the following dimensions; there is enough space for the operation of the machine, and to ensure customer safety.

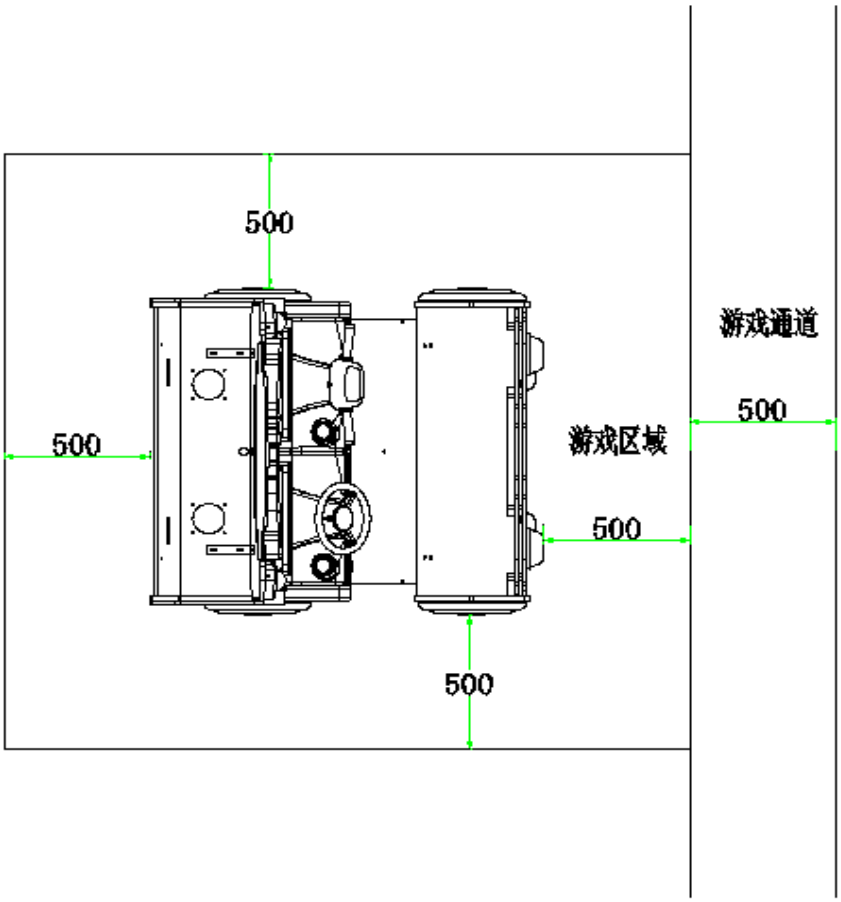

⚠ Note: the machine can not be placed in an inclined position, placed in an inclined position prone to accidents.

⚠ Note: the division of the game area to the identification of the machine labeling.

3-6 Pay attention before turn on the machine

Check power supply voltage. To ensure that the electrical parameters of the machine are consistent with the requirements of the machine. Otherwise it may cause fire or burn out the machine.

Too many connection wires in the same socket connection port, may cause overheating triggered by fire.

⚠ Warning

◎ The installation machine do not change or replacement of parts, so as not to cause fire or short circuit。

四、Wiring and the attention item

- The end of the wire box machine access wiring to power line, the power line plugs the other end socket.
- Please access the power according to the voltage - machine identification. Otherwise it may cause damage to the machine.
- In order to avoid making unnecessary damage, please make sure the socket have a grounding function.
- If can not through the socket to realize the ground, please through other ways to perform grounding.。

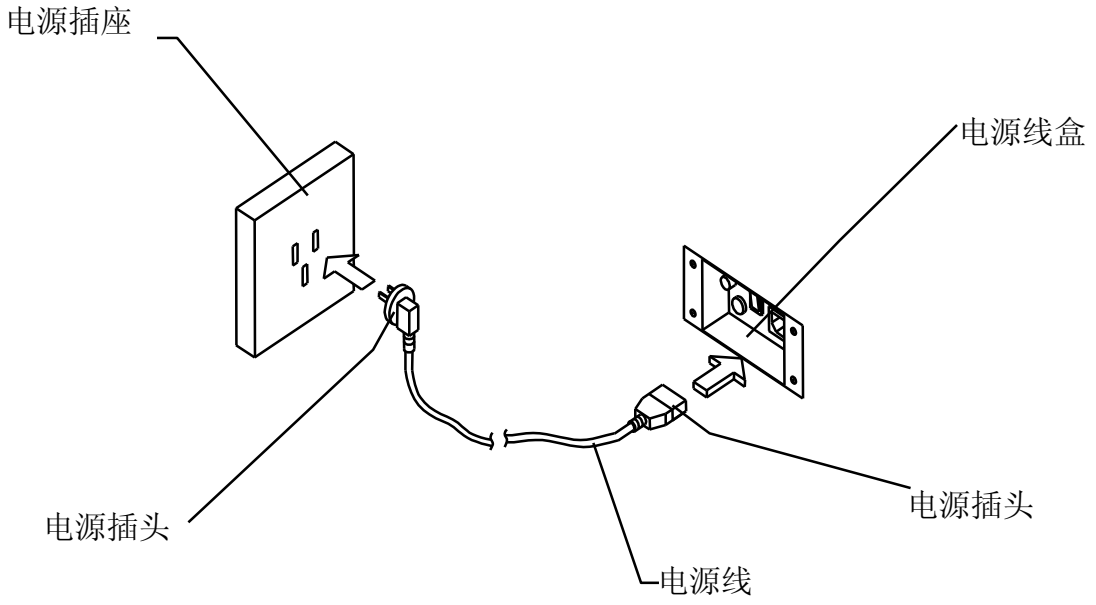

⚠ **Warning**：This machine's working voltage is 220V, please access the power according to the voltage of the machine identification, otherwise it may cause damage to the machine.

Warning:

- The power line is not heavy down, this will damage the wires easily lead to short-circuit, may lead to serious fires.

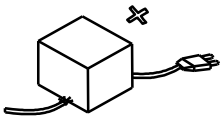

- While the power line from the socket, should grasp and pull the plug, not catch wire pulled out.

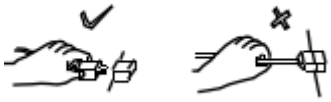

- Do not directly pull the plug with wet hands.

- Do not hard, the tensile distortion of power line, the power line can not be exposed near the high temperature object.
- The power line can not easily be kicked or contact.

- Use the correct voltage and fuse (technical parameter).

五、set up and maintain

Installation and commissioning

- Before the installation is, please click the list of approved parts, components assembly;
- The use of the site must be smooth and solid, when in place to adjust the machine to the ground level of the fixed seat;
- After installed in power line boot, examine every part of the machine operation is normal, such as the discovery of abnormal phenomenon, to stop in time to remove obstacles.

Appearance check

- In order to ensure the safety of the machine, please check the following points before starting the machine:
- The "warning signs" are clearly visible, flawless and perfect, paste the location correctly.
- The parameters of power supply are connected with the same machine.
- The machine parts screw is loose; the steering wheel assembly is loose.
- To check the connector is loose, the terminal is off.
- The machine place is stable, and the adjustment of the top foot casters is appropriate.
- The machine’s placed area is appropriate.

Run check

- The horn is normal pronunciation.
- The fluorescent lamp and the key light is bright.
- The image is clear and normal.

care and maintenance

- Every day in front of the business, should try machine moved often rear can use.
- The machine have dirt dust, with a soft cotton cloth painted cleaner to wipe clean;
- The new machine is running after a month shall be checked once every parts is normal;
- To regularly check the machine.

Clean

- The machine shell
  Cleaning machine stains on the surface, use a clean soft cloth.
- The display screen
  Use clean, soft, and clean the screen with a moisture of the cotton cloth,

and not let anything that make it acidic and stick to the touch screen.

- The exhaust fan

  Exhaust fan is the main tool of internal cooling machine is one of the must exhaust fan clean normal operation, to maintain the smooth flow of air outlet.

⚠ **Warning：**

- **Must turn off the power on the machine for maintenance and repair.。**

  In order to avoid the short circuit, the relevant personnel in the internal device of the machine in front of the power supply, if this operation requires the power to connect, need to comply with the requirements of the operation manual.

- **Replacing the device to determine the selection of appropriate accessories.**

  use of incorrect parts may cause electrical shorts, damage to the motherboard and components.

- **Do not disassemble, assemble, change equipment.**

  This may cause electrical shorts, mechanical failure, etc., may lead to fire.

- **Do not in the machine above placed containing water, flower vases, drinking cups, containers, etc., also do not in the machine above placed chemicals and heavy.**

  The overflow of the liquid will lead to electrical short circuit damage to the device, while the upper fall will damage the human body and the destruction of the machine.

- **The items can not place in the machine exhaust inlet.**

  The exhaust port is blocked when the internal temperature of the machine will lead to increased, influence the normal game, even damage the devices.

- **Can't be free to repair the machine.**

  This may cause a short circuit or operation out of control, etc.

六、Fault analysis and solution

Failure phenomenon	Possible failure reasons	Fault countermeasure
No way to pay coin	The coin is not adjusted. The slot card is counterfeit.	The adjustment of the coin, token tolerance trimmer. Remove the counterfeit card.
No ticket out	No input 12V voltage. The lottery machine driving signal or the signal line loose ticket cancellation. The lottery ticket is not down on the lottery wheel pressure. The failure of the main board of the computer driver or the ticket of the ticket. Host board is not designed for the lottery.	Check the output voltage of the power supply box and line. Voltage change and line of check drive consumer ticket signal. Put down the pressure round of the lottery ticket, press. Replacing main board.
No sound	The volume is too small. Sound output signal line. Horn fault. Sound power amplifier fault. Circuit board fault. The audio connection is loose or damaged. If the speaker is on.	High volume. Connect line. Replace horn. Replacing main board. Replacement circuit. Re connect the audio connection. Switch on the speaker switch.
No action	No power input to the machine. Power switch is not turned on. The power fuse burn out. Power supply box without voltage output. Power supply voltage of main board. Motherboard failure.	Open the power switch and plug in the power cord. Turn on the power switch. Circuit short circuit and replace the new fuse. Replace power box. Connect power supply connection. Replacing main board.
No show	The monitor power is broken.	Detect power supply line or replace power line.

The display has a color difference	Display settings are incorrect.	Adjust the RGB color in the OSD menu or choose color. Select the AUTOSET key to adjust the color of the display.
	The visual angle of the display is a deviation.	Adjust display position.
Display image or ripple pattern	Display resolution settings are not correct.	Adjust display resolution settings.
	Can adjust the display menu settings to reduce the situation.	Into the OSD menu in the mole grain (water ripples) to adjust.
	Monitor power line aging.	Changing display power supply line.
	Monitor refresh rate settings are not correct.	Adjust refresh rate settings.

七、Game Instruction

7-1 How to play

1 corresponding input tokens, press the start button.

2 children can choose single or double game. Then drove the car to complete all kinds of trigger events.

3 in the game's time. The smaller the number of friends, the more the number of votes!

4 to two people together with the game coin.

7-2 Operation interface

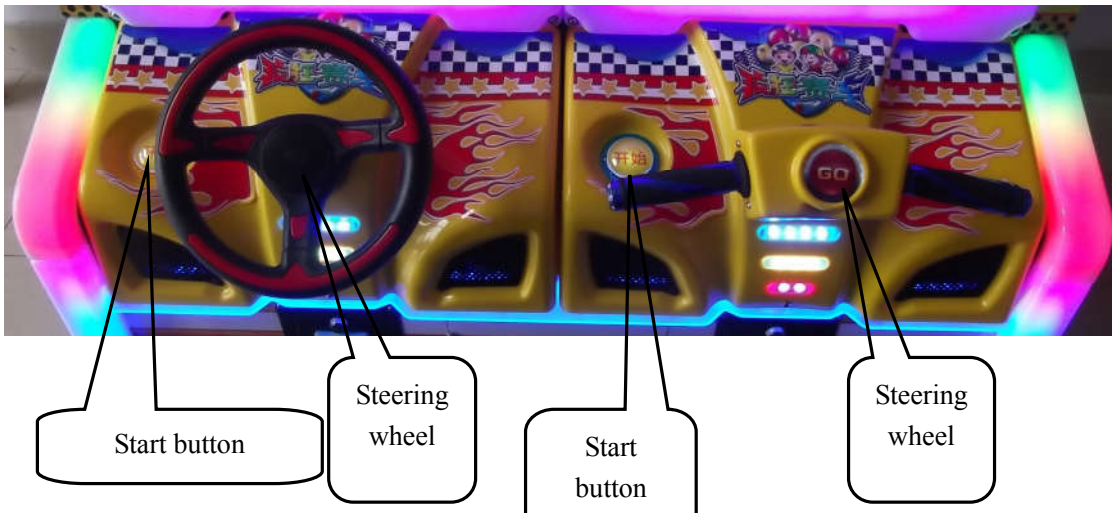

7-3 Control signals and instructions

1 check the attached table and IO diagram, the motherboard can input plane machine, the output corresponding to the connection position.

2.DIP adjust the reference IO table, capital letters for the factory settings, the user can adjust according to the operating conditions.

3 motherboard schematic diagram:

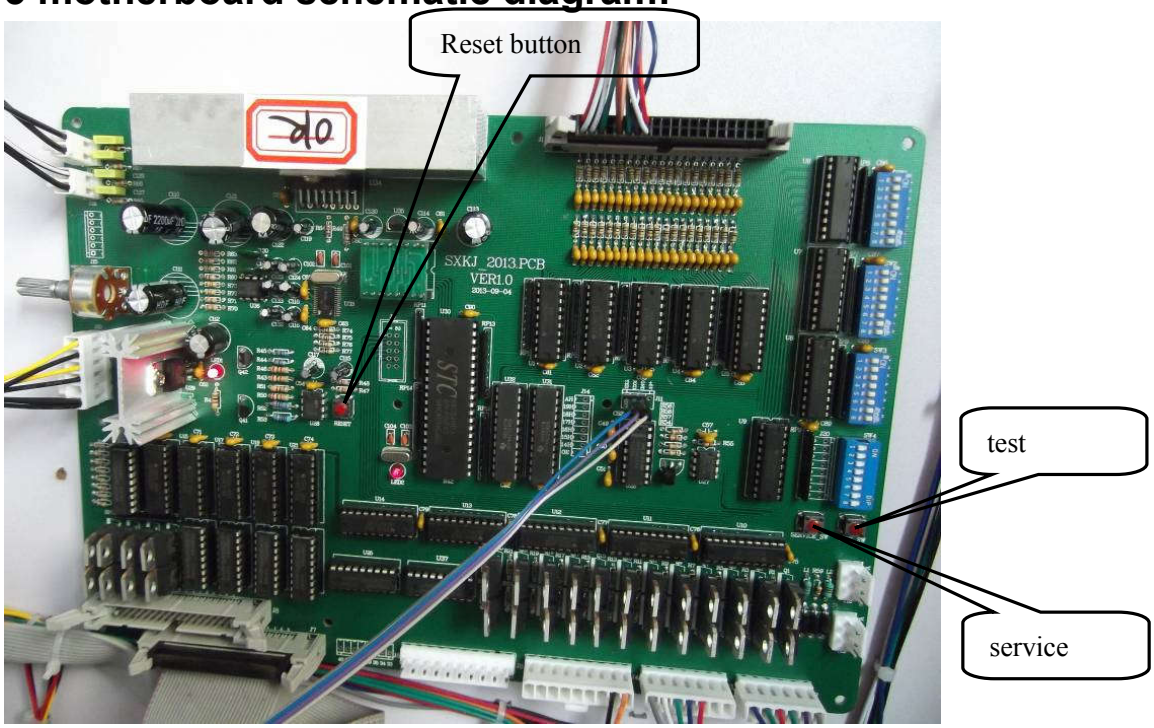

The above instructions are subject to change without notice, please forgive me！

7-4 Use and maintenance instructions

1 to maintain and repair the machine must turn off the power supply.

In order to avoid short circuit, the relevant personnel in the internal device in contact with the device before the power off,

If this operation requires the power to be connected, the operating instructions are required.

2 when the replacement device to determine the appropriate accessories.

The use of incorrect parts may cause electrical shorts, damage to the motherboard and components.

3 do not disassemble, assemble, change equipment.

This may cause electrical shorts, mechanical failure, etc., may lead to fire.

4 do not put on the machine with a water vase, cups, containers, etc., also do not put chemicals and heavy objects on the machine.

The overflow of the liquid will lead to electrical short circuit damage to the device, while the upper fall will damage the human body and the destruction of the machine.

5 in the machine exhaust inlet do not place objects.

The exhaust port is blocked when the internal temperature of the machine will lead to increased, influence the normal game, even damage the devices.

6 non maintenance personnel can not be free to repair the machine.

This may cause a short circuit or operation out of control, etc..

八、Detail of spare parts

8-1 Instruction part

Total setting

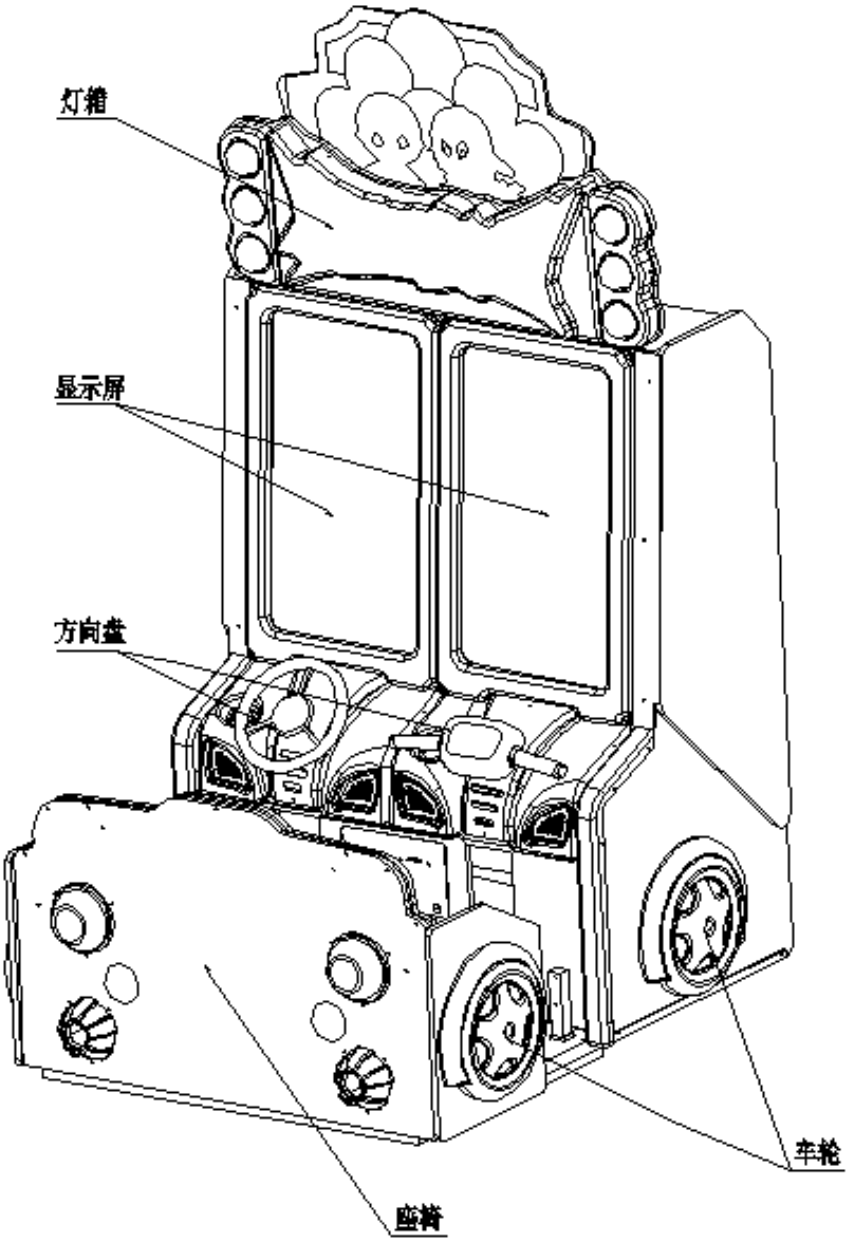

Steering wheel spare parts:

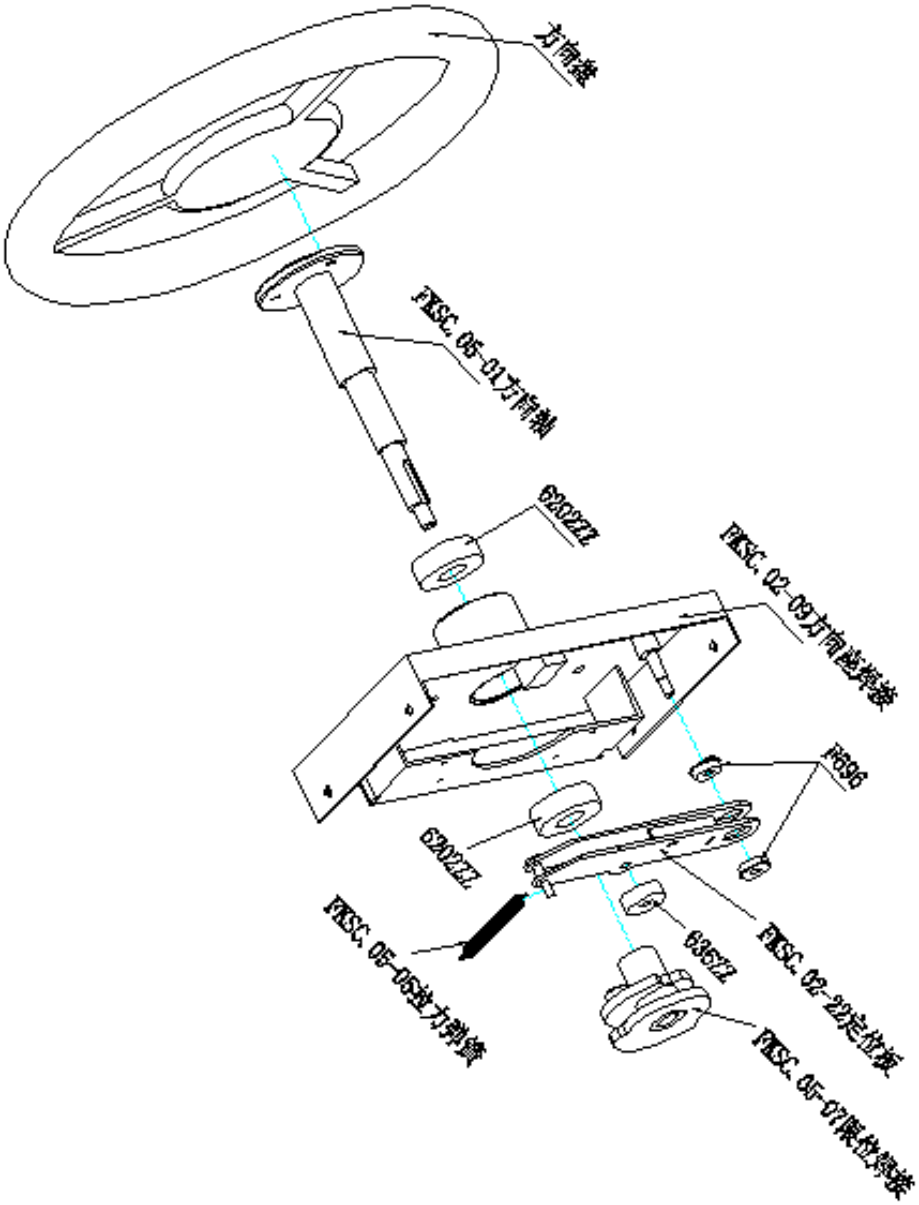

8-2 Inset coin spare parts

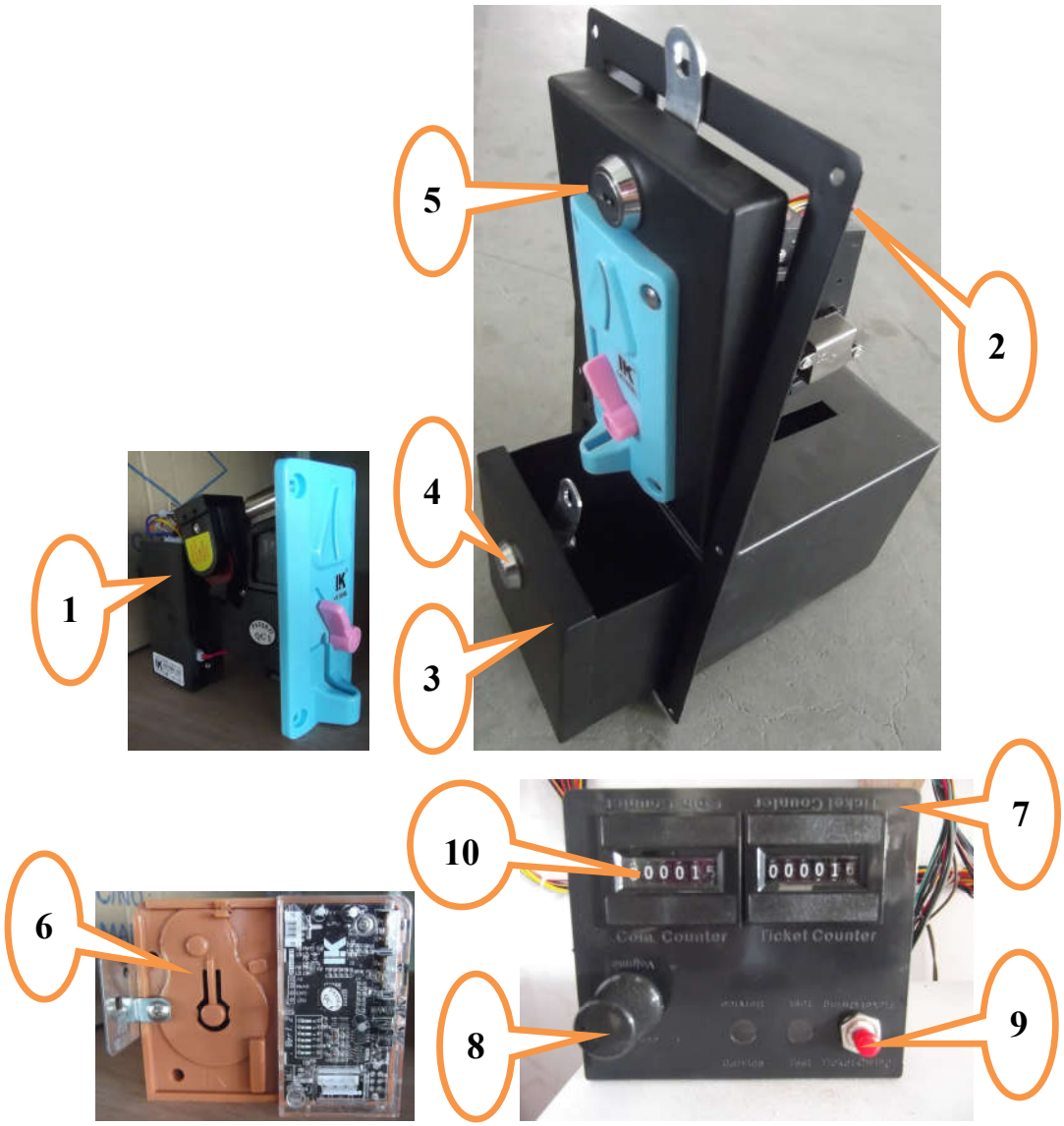

No	Name	Specifications and materials	quantity
1	Coin accept	Side cast electronic type LK100M	2
2	Coin door	Iron	2
3	Coin box	Iron	2
4	AH78 lock	78 short lock	2
5	AH57 lock	57 long lock	2
6	Ticket dispenser	LK003C Ver2.42	2
7	Counter frame	Black	1
8	Sound regulator	Black	1
9	Fix button	Little button(red)	1
10	Six bit counter	C-012	2

8-3 Ticket Dispenser Instruction

The use of lottery machine instructions: the lottery will be inserted into the slot, the opportunity to automatically start the device. (hold down the forward button can also be manually loaded) connected power and signal line to use.

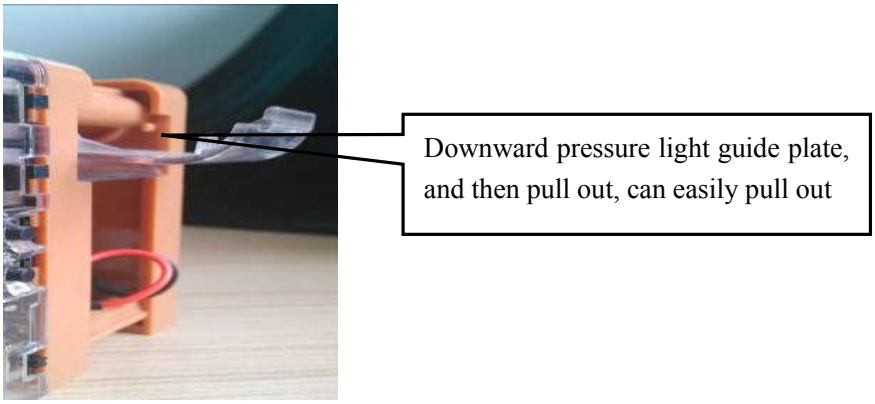

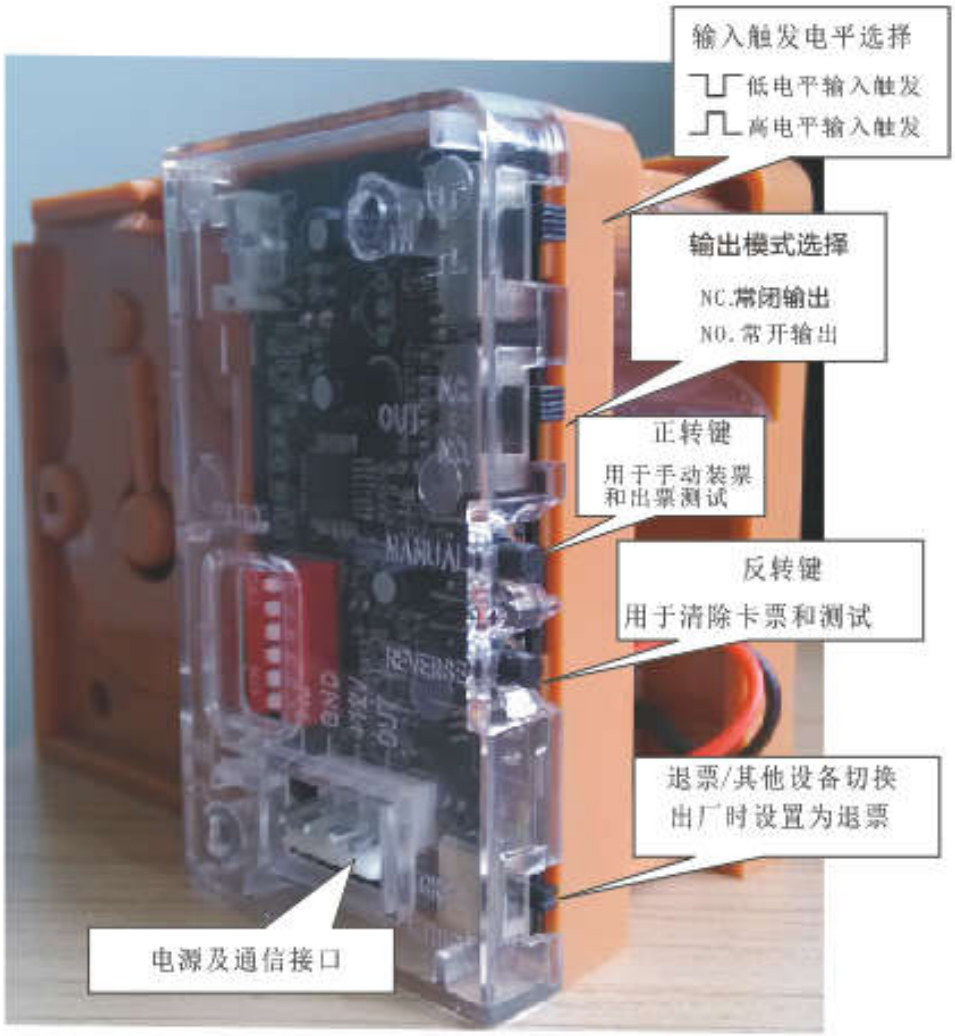

8-4 Speaker parts

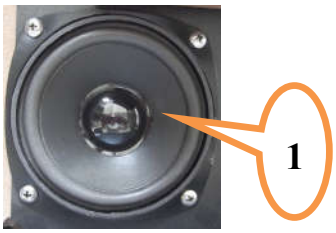

NO	Name	Specifications and materials	Quantity
1	Circular Triton speaker	4inch 8欧15W	2

8-5 Insurance tube and power module

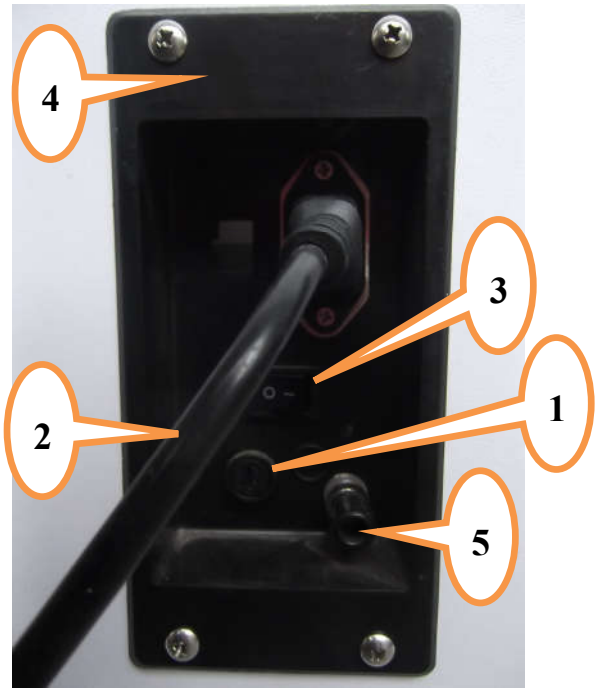

No.	name	Specifications and materials	Quantity
1	Base of insurance tube		1
2	Power cord	6.3A	1

3	Rocker switch		1
4	Wire box		1
5	Terminal		1

8-6 Electrical installation component

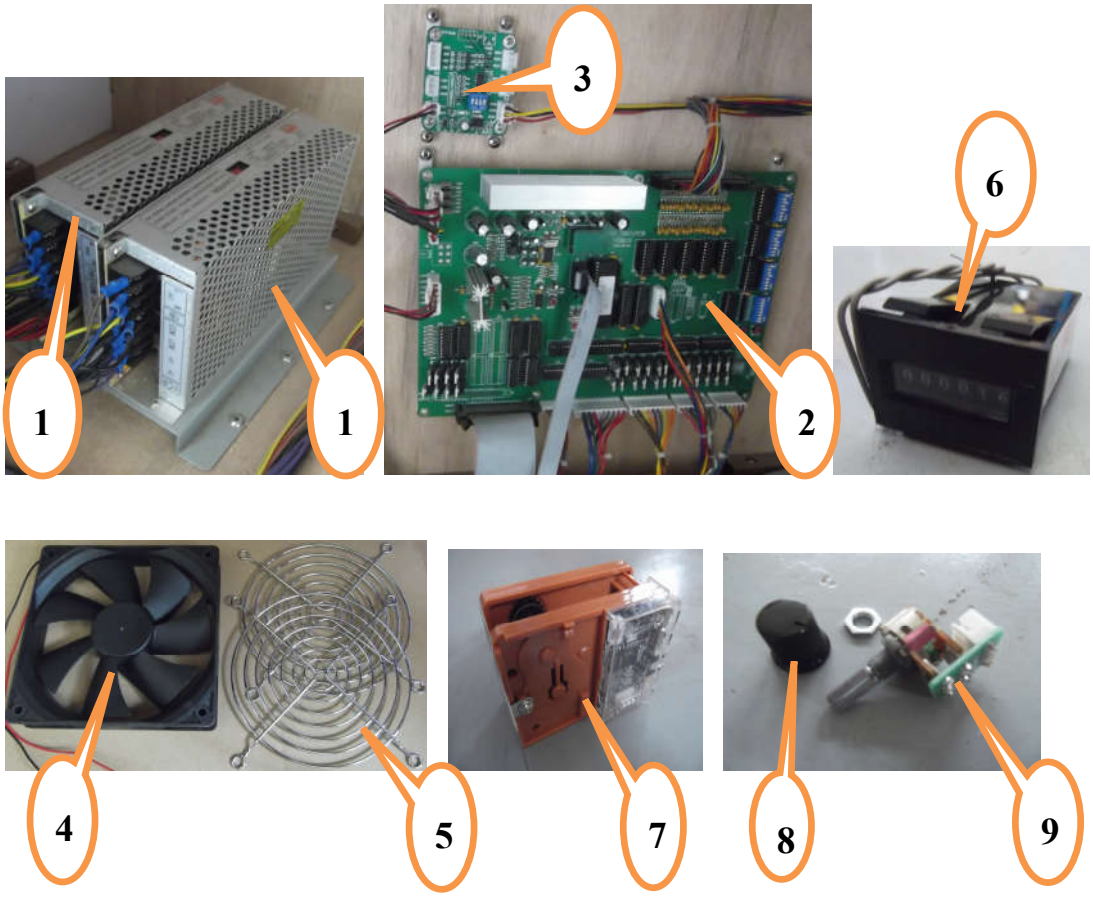

NO.	Name	Specifications and materials	Quantity	Unit
1	Power Supply	5V 150W	1	个
		12V 150W	1	
2	mainboard	SXKJ-2013.PCB VER1.0	1	块
3	Board control light		1	块
4	Fun	1804U3A 001 12V	2	个
5	Fun net		4	个
6	Accouter	C-012	2	个
7	Ticket Dispenser	LK003C Ver2.42	2	个
8	Potentiometer rotary button	Black\	1	个
9	Potentiometer		1	个

8-7 Art section

NO.	Name	Specifications and materials	Quantity
1	Light box picture（up）		1
2	Light box picture（down）		1
3	Picture by two side	White adhesive 过 UV	Left same as right
4	Picture by the side of the Screen		Left same as right
5	Operating table picture	White adhesive 过 UV	2
6	In front door picture	White adhesive 过 UV	1
7	steering wheel picture	White adhesive 过 UV	1
8	Picture of the seat two side	White adhesive 过 UV	Left same as right

9	座椅背画面	White adhesive 过 UV	1

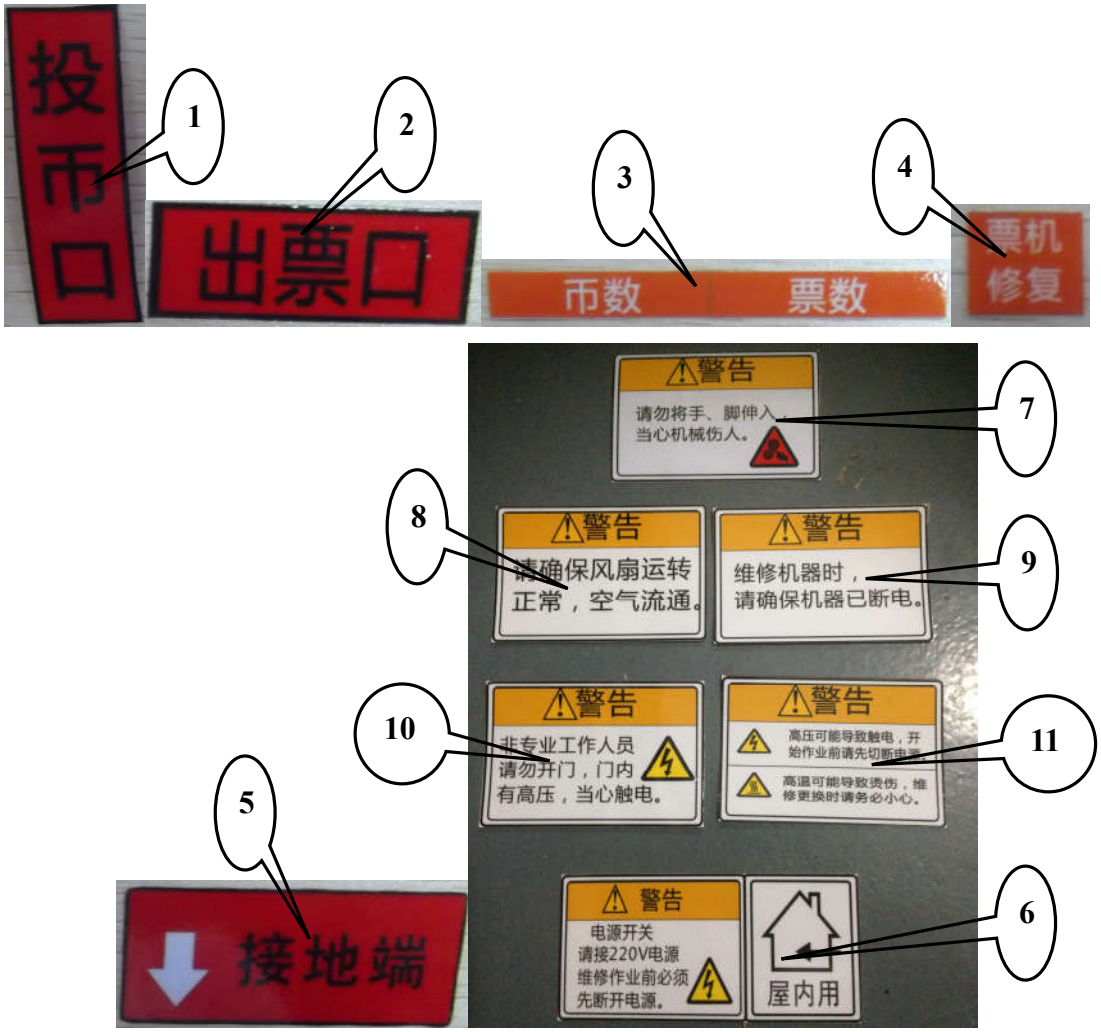

NO.	Name	Specifications and materials	Quantity
1	Inset coin sticker	White adhesive	2
2	Ticket sending sticker	White adhesive	2
3	Chinese counter sticker	White adhesive	1
4	Ticket dispenser repair sticker	White adhesive	1
5	Contact floor sticker	White adhesive	1
6	Power supply use indoor label	White adhesive	1
7	Do not touch label	White adhesive	1
8	Make sure the fun working label	White adhesive	1
9	Repair label	White adhesive	1
10	High voltage label	White adhesive	1
11	High temperature High voltage label	White adhesive	1

8-8 Electronic parts

NO.	Name	Specifications and materials	Quantity	Unit
1	Light bar of light box by two side	12V RGB aluminum light 5CM	6	条
2	Light box back light bar	0805 12V green length 0.8m width 6mm	1	条
3	LED light bar	MX-S5050W 700mm	2	条
4	Screen light bar	12V/5050RGB soft light bar/2.4M	2	条
5	Operate table colorful light bar (two side)	WS2811B 700mm/45珠/5V	2	条
6	Operate table light bar with light	12V RGB 铝灯条 10CM	6	条
7	Car wheel colorful light bar	WS2811B 660mm/40珠/5V	4	条
8	Seat LED light bar	3528 12V blue length1.25m width 8mm	1	条
9	Operate table LED light	3528 12V blue length 1.05m width 8mm	1	条
10	Seat LED light	ADS-75123-2835	4	个
11	Seat LED light	ADS-3793-2835	2	个
12	Seat LED light	LED-9G.PCB	2	块

九、IO table

Mainboard：LFKJ-2014.PCB

Imput part：

INPUT	content	INPUT	content
J9-1 （1）	1P inset coin	J9-9 （9）	2P inset coin
J9-2 （2）	1P ticket dispenser feedback	J9-10 （10）	2P ticket dispenser feedback
J9-3 （3）	1P start button	J9-11 （11）	2P start button
J9-4 （4）	1P Left turn switch	J9-12 （12）	2P Left turn switch
J9-5 （5）	1P Right turn switch	J9-13 （13）	2P Right turn switch
J9-6 （6）	ticket dispenser restore	J9-14 （14）	setting
J9-7 （7）		J9-15 （15）	moving
J9-8 （8）		J9-16 （16）	confirm

Output part：

OUTPUT	content	OUTPUT	content
J8-2 （1）	inset coin quantity	J10-1 （9）	LED light 3
J8-3 （2）	ticket quantity	J10-2 （10）	seat light 1
J8-4 （3）	1P ticket dispenser drive	J10-5 （11）	seat light 2
J8-5 （4）	2P ticket dispenser drive	J10-4 （12）	seat light 3
J8-6 （5）	1P start button light	J10-5 （13）	control table light 1
J8-7 （6）	2P start button light	J10-6 （14）	control table light 2
J8-8 （7）	LED light 1	J10-7 （15）	control table light 3
J8-9 （8）	LED llight 2	J10-8 （16）	